Finest Quality

JUKI

Union Special

ADJUSTING INSTRUCTIONS / ILLUSTRATED PARTS LIST

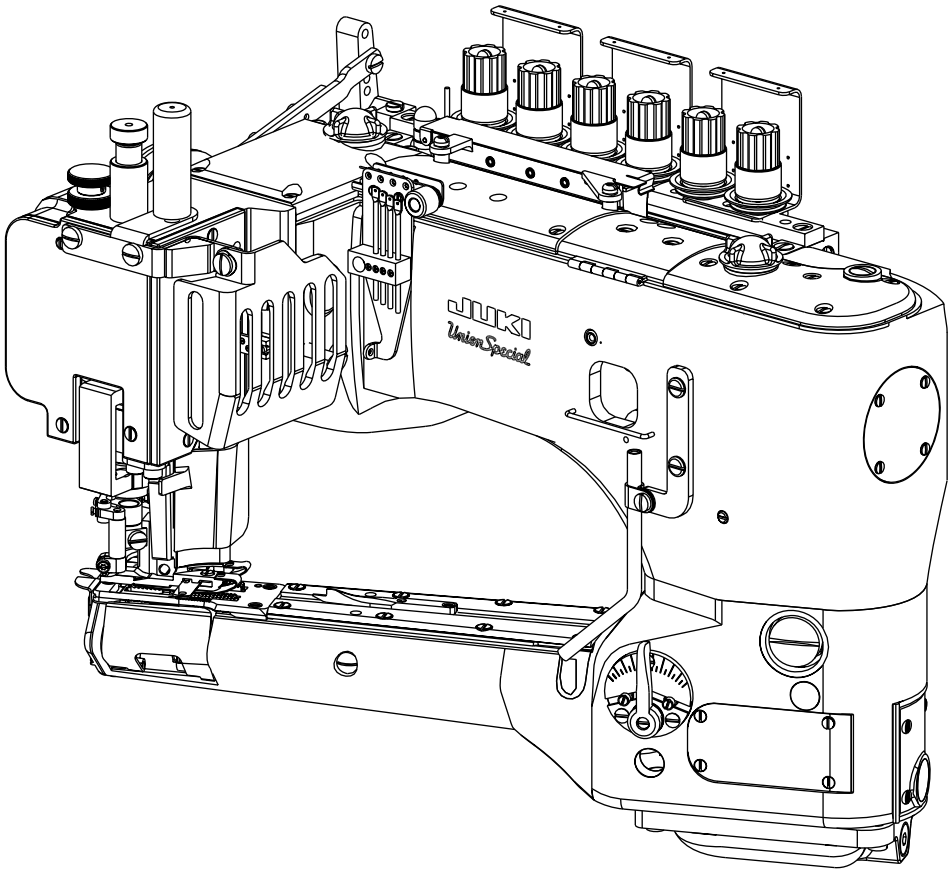

Oil - Less
36200 CLASS

MANUAL NO. PT0202
FOR STYLES

36200UAD52	36200UJED60
36200UED52	36200ULD60
36200UED60	36200UMD60
36200UHD52	36200UYD52
36200UJD60	36200UYD60

05/07/04

From the library of: Diamond Needle Corp

Manual No. PT0202 Ilustrated Parts List for 36200 Series Machines

First Edition Copyright 2004
By
Union Special Corporation Rights Reserved In All Countries
Printed in U.S.A. January 2004

PREFACE

This parts manual has been prepared to assist you in locating individual parts or assemblies on 36200 Series machines.

It is the desire of Union Special that each machine run at its optimum performance. Parts listed in this manual are designed specifically for your machine and are manufactured with utmost precision to assure long lasting service.

This manual has been comprised on the basis of available information. Changes in design and/or improvements may incorporate a slight modification of configuration in illustrations or part numbers.

On the following pages are illustrations and terminology used in describing the parts used on 36200 Series machines.

TERMS

Prices are net cash and subject to change without notice. All shipments are forwarded F.O.B. shipping point. A charge is made to cover postage and insurance.

CONTENTS

PREFACE 2
TERMS 2
IDENTIFICATION OF MACHINES 3
TORQUE REQUIREMENTS 3
DESCRIPTION OF MACHINES 3
STYLE OF MACHINES 4
SAFETY RULES: 5
IDENTIFYING PARTS 6
NEEDLES 6
APPLICATION 6
Threading 7
Oiling 8
ADJUSTING INSTRUCTIONS 9
SETTING THE NEEDLE BAR HEIGHT & ALIGNMENT 9
SETTING THE NEEDLE BAR HEIGHT & ALIGNMENT (CONT) 10
ALIGNING THE CYLINDER 10
SETTING THE LOOPER TRAVEL 10
INSTRUCTIONS FOR USING SYNCHRONIZING GAUGE 21277CG 11
SETTING THE LOOPER TRAVEL 11
TIMING THE NEEDLES TO THE LOOPER 11
TIMING THE NEEDLES TO THE LOOPER (CONT.) 12
LOOPER ADJUSTMENTS 13
LOOPER ADJUSTMENTS (CONT.) 14
SETTING THE FRONT NEEDLE GUARD 14
SETTING THE FEED DOGS 14
SETTING THE REAR NEEDLE GUARD 15

From the library of: Diamond Needle Corp

CONTENTS (CONT.)

SETTING THE STITCH LENGTH 15
DIFFERENTIAL FEED CONTROL 15
SETTING THE PRESSER FOOT 15
SETTING THE PRESSER FOOT (CONT.) 16
SETTING THE PRESSER FOOT (CONT.) 17
SETTING THE KNIFE DRIVE LEVER 17
SETTING THE KNIFE DRIVE LEVER (CONT.) 18
SETTING THE TRIMMING KNIVES FOR LAP SEAMING (ALL STYLES) 18
SETTING THE TRIMMING KNIVES (ALL STYLES) (CONT.) 19
NEEDLE THREAD ADJUSTMENTS 19
LOOPER THREAD ADJUSTMENT 20
COVER THREAD ADJUSTMENT 20
TENSION RELEASE 20
HUNG FOOT ADJUSTMENT 21
SETTING THE LAP FORMER 21
LAP SEAMING 21
OIL SIGHT GAUGES, TOP COVERS & MISCELLANEOUS TAKEUP & EYELET PARTS 23
MAIN FRAME, BUSHINGS & MISCELLANEOUS EYELET & COVER PARTS 25
MAIN SHAFT & MISCELLANEOUS OILING 27
CRANKSHAFT & NEEDLE LEVER PARTS 29
TENSION PARTS 31
DETACHABLE HEAD, HEAD COVERS, NEEDLE BAR & NEEDLE BAR HEAD 33
DETACHABLE HEAD, HEAD COVERS, NEEDLE BAR & NEEDLE BAR HEAD 35
DIFFERENTIAL & MAIN FEED BARS, FEED DOGS & FEED LIFT ECCENTRIC ASSEMBLY 37
FEED DRIVE ASSEMBLY, FEED ROCKER & LOOPER AVOID PARTS 39
KNIFE DRIVING PARTS 41
LOOPER ROCKER SHAFT & LOOPER ROCKER DRIVE PARTS 43
LAP FORMER, MISCELLANEOUS CYLINDER COVERS, THROAT PLATE, & CHAIN CUTTING KNIFE 45
CYLINDER BUSHINGS, DIFFERENTIAL FEED CONTROL ASSEMBLY & MISCELLANEOUS CYLINDER COVERS 47
PRESSER FOOT FOR 36200UED52, 60 49
PRESSER FOOT 36200UYD52, 60 51
PRESSER FOOT SHOE CHART 52
PRESSER FOOT SHOE CHART 53
THREAD STAND 55
MISCELLANEOUS GAUGES & TAPE REEL PARTS 57
THREAD LUBRICATOR 59
NUMERICAL INDEX OF PARTS 60
NUMERICAL INDEX OF PARTS 61

From the library of: Diamond Needle Corp

IDENTIFICATION OF MACHINES

Each UNION SPECIAL machine is identified by a style number, which is stamped into the style plate affixed to the middle of the machine under the tension assembly.

The serial number is stamped in the casting at the right rear base of the machine.

TORQUE REQUIREMENTS

Torque (measured in inch-pounds) is a rotating force (in pounds applied through a distance by a lever (in inches or feet). This is accomplished by a wrench, screwdriver, etc. Many of these devices are available, which when set at the proper amount of torque will tighten the part to the correct amount and no tighter.

All straps and eccentrics should be tightened to 19-21 inch-pounds (22-24cm/kg) unless otherwise noted.
All other nuts, bolts, screws, etc. should be tightened by hand as tightly as possible, unless otherwise noted.

DESCRIPTION OF MACHINES

Universal style, Feed-off-the-arm, high speed, medium throw, five or six thread machine. There are four needles and one retainer abreast, one looper and a manually adjusted differential feed control. There is an enclosed automatic lubricating system, filter type oil return pump, visual sight oil action and supply gauges. The maximum work space in front of the needles is 8 inches (203.2mm). Recommended maximum speed - 4200 R.P.M. for all Styles. Machines can be used on either table or pedestal mount.

STYLE OF MACHINES

36200UAD52 FLATSEAMER: For simultaneously trimming right and left plies and flatseaming knit undergarments, infants clothing and similar light to medium weight materials where closing elastic is required.
Seam specifications 607-FSa-1. Components produce a .205" (5.2mm) wide seam.

36200UED52 LAP FLATSEAMER: For simultaneously trimming right and left plies and lap seaming men's and woman's briefs, undergarments, sweatpants, sweatshirts, infant sleepers and similar garments. Flat sewing parts with lap seam presser foot and lapformer. Seam specifications 607LSa-1. Components produce a .205"(5.2mm) wide seam.

36200UED60 LAP FLATSEAMER: Same as 36200UE52 except fitted with components to produce a .236" (6.0mm) wide seam.

36200UHD60 LAP FLATSEAMER: For simultaneously trimming right and left plies and lap seaming men's briefs shorts, and similar garments made of light to medium weight material where crossing elastic and heavy seams, such as leg bindings is necessary. The right section of the sewing parts are raised .050" (1.27mm) to assure a better lap seam. Seam specifications 607-LSa-1. Components produce a .205" (5.2mm) wide seam.

36200UJD60 FLATSEAMER: Same as 36200UA52 except fitted with components to produce a .236" (6.0mm) wide seam.

36200UJED60 FLATSEAMER: For simultaneously trimming right and left plies and flatseaming knit undergarments, infants clothing and similar light to medium weight materials where closing elastic is required.
Seam specifications 607-FSa-1.
LAP FLATSEAMER: For simultaneously trimming right and left plies and lap seaming men's briefs shorts, and similar garments made of light to medium weight material where crossing elastic and heavy seams, such as leg bindings is necessary. Seam specifications 607-LSa-1. (Machine includes sewing parts to sew both FSa-1 Flat (butt) seam and LSa-1 Lap seam.)
Components produce a .236" (6.0mm) wide seam.

36200ULD60 LAP FLATSEAMER:

36200UMD60 LAP FLATSEAMER: Same as 36200UHD52 except fitted with components to produce a .236" (6mm) wide seam.

36200UYD52 LAP FLATSEAMER: For simultaneously trimming right and left plies and lap seaming operations on the leg openings of knitted boxer style briefs using wide knitted callerette material. Flat sewing parts with special lap seam presser foot and special lap former. Fitted with long feed dogs," T" shaped yielding section with light weight spring, light presser bar spring and wear plates on presser foot.
Seam specifications 607LSa-1. Components produce a .205(5.2mm) wide seam.

From the library of: Diamond Needle Corp

SAFETY RULES:

1. Before putting the machines described in this manual into service, carefully read the instructions. The starting of each machine is only permitted after taking notice of the instructions and by qualified operators.

   IMPORTANT! Before putting the machine into service, also read the safety rules and instructions from the motor supplier.

2. Observe the national safety rules valid for your country.

3. The sewing machines described in this instruction manual are prohibited from being put into service until it has been ascertained that the sewing units which these sewing machines will be built into, have conformed with the EC Council Directives (89/392/EEC, Annex II B).

   Each machine is only allowed to be used as foreseen. The foreseen use of the particular machine is described in paragraph "STYLES OF MACHINES" of this instruction manual. Another use, going beyond the description, is not as foreseen.

4. All safety devices must be in position when the machine is ready for work or in operation. Operation of the machine without the appertaining safety devices is prohibited.

5. Wear safety glasses.

6. In case of machine conversions and changes all valid safety rules must be considered. Conversions and changes are made at your own risk.

7. The warning hints in the instructions are marked with one of these two symbols:

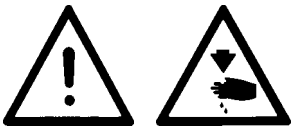

8. When doing the following the machine has to be disconnected from the power supply by turning off the main switch or by pulling out the main plug:

   8.1 When threading needle(s), looper, spreader etc.

   8.2 When replacing any parts such as needle(s), presser foot, throat plate, looper, spreader, feed dog, needle guard, folder, fabric guide etc.

   8.3 When leaving the workplace and when the workplace is unattended.

   8.4 When doing maintenance work.

   8.5 When using clutch motors without actuation lock, wait until the motor is stopped totally.

9. Maintenance, repair and conversion work (see item 8) must be done only by trained technicians or special skilled personnel under consideration of the instructions.

10. Any work on the electrical equipment must be done by an electrician or under direction and supervision of special skilled personnel.

11. Work on parts and equipment under electrical power is not permitted. Permissible exceptions are described in the applicable sections of standard sheet DIN VDE 0105.

12. Before doing maintenance and repair work on the pneumatic equipment, the machine has to be disconnected from the compressed air supply. In case of existing residual air pressure, after disconnecting from compressed air supply (i.e. pneumatic equipment with air tank), the pressure has to be removed by bleeding.

From the library of: Diamond Needle Corp

36200UYD60 LAP FLATSEAMER: Same as 36200UY52 except fitted with components to produce a .236" (6.0mm) wide seam.

ILLUSTRATIONS

This manual has been arranged to simplify ordering repair parts. Exploded views of various sections of the mechanism are shown so that the parts may be seen in their actual position in the machine. On the page opposite the illustration will be found a listing of the parts with their part numbers, description and the number of pieces required in the particular view being shown.

Numbers in the first column are reference numbers only, and merely indicate the position of the part in the illustration. The reference number should never be used in ordering parts. Always use the part number listed in the second column.

Component parts of sub-assemblies which can be furnished for repairs are indicated by indenting their descriptions under the description of the main sub-assembly. As an example refer to the following text.

9.	29126 EC	Upper Looper Drive Shaft Assembly	1
10.	22503 F	Screw	1
11.	39543 E	Cam Follower Locking Clamp	1

It will be noted in the previous example that the cam follower, bushing and cam guide and the upper looper drive shaft are not listed. The reason is that replacement of these parts individually is not recommended, so the complete upper looper drive shaft assembly should be ordered.

When a part is common to all machines covered in this manual, no specific usage will be mentioned in the description. However, when the parts for the various machines are not the same, the specific usage will be mentioned in the description and, if necessary, the difference will be shown in the illustration.

A numerical index of all the parts shown in this manual is located at the back. This will facilitate locating the illustration and description when only a part number is known.

IDENTIFYING PARTS

Where the construction permits, each part is stamped with its part number. On some of the smaller parts and on those where construction does not permit, an identification letter is stamped in to distinguish the part from similar ones.

PLEASE NOTE: Part numbers represent the same part, regardless of which manual they appear. On all orders please include part number, name and style of machine for which the part was ordered.

NEEDLES

Each needle has both a type and size number. The type number denotes the kind of shank, point, length, groove, finish and other details. The size number, stamped on the needle shank, denotes the largest diameter of the blade measured between the shank and the eye. Collectively, the type number and size number represent the complete symbol which is given on the label of all needles packed and sold by Union Special.

TYPE	DESCRIPTION
118GAS	Extra short, double groove, struck groove, .060" diameter shank, chromium plated needle. Sizes available 065/025, 070/027, 075/029, 080/032, 090/036.
118GBS	Extra short, single groove, struck groove, spotted .060" diameter shank, chromium plated needle. Sizes available 075/029, 080/032.
118GHS	Same as 118GBS, except with ball point. Sizes available 070/027, 075/029, 080/032.
118GJS	Same as 118GHS, except with tapered blade and ball point. Sizes available 065/025, 070/027, 075/029.
118GKS	Round shank, round point, extra short, double groove, struck groove, spotted, chromium plated needle. Sizes available 070/027, 075/029, 080/032.
36211	Retainer needle, no scarf, chromium plated. Sizes available 065/025, 070/027, 075/029.

APPLICATION

When changing the needle, make sure it is fully inserted in the needle driving arm before the clamp screw is tightened.

To have needles promptly and accurately filled, an empty package, a needle sample, or the type and size number should be forwarded. Use the description on the label. A complete order should read as follows: "100 needles, type 118 GKS, size 075/029".

From the library of: Diamond Needle Corp

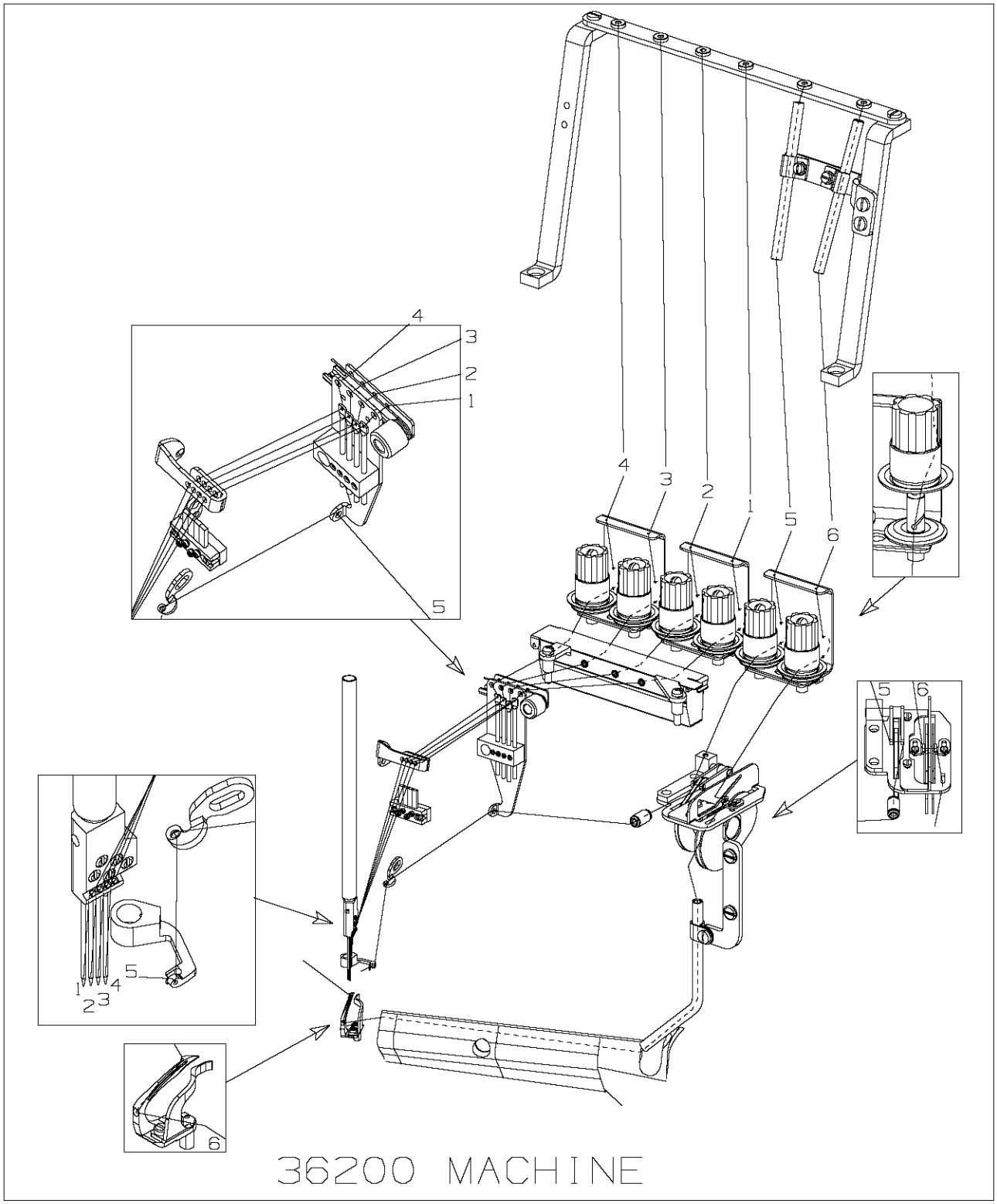

From the library of: Diamond Needle Corp

OILING

Referring to Fig. 1, fill the machine at (A) and (B). Oil capacity of class 36200 is 2.5 ounces in the bottom reservoir and 2.5 ounces in the top reservoir. Use a straight mineral oil, Saybolt viscosity of 90 to 125 seconds at 100° Fahrenheit (Union Special Spec 175 part no. 28604R). The oil level is checked at gauges (C) and (D). Maintain oil level between the red lines of these gauges.

This machine is automatically lubricated by a continuously driven rotary pump. Oil flow can be observed through windows (A) and (B). When installing a new machine or starting a machine that has been idle for some time, priming may be necessary. Remove plug screws (E), fill holes with recommended oil and replace screws BEFORE operating. If oil does not flow while machine is running, pump is inoperative.

Remove screw 22733B (F, Fig. 1 inset) to drain oil from the top reservoir. To drain oil from bottom reservoir remove screw 999-196 (G).

Occasionally, it is necessary to oil the linkage of the presser foot, the knife holder shank (36273A), guide collar (36273K) and the various links and bearings of the presser foot lifting mechanism and thread tension release.

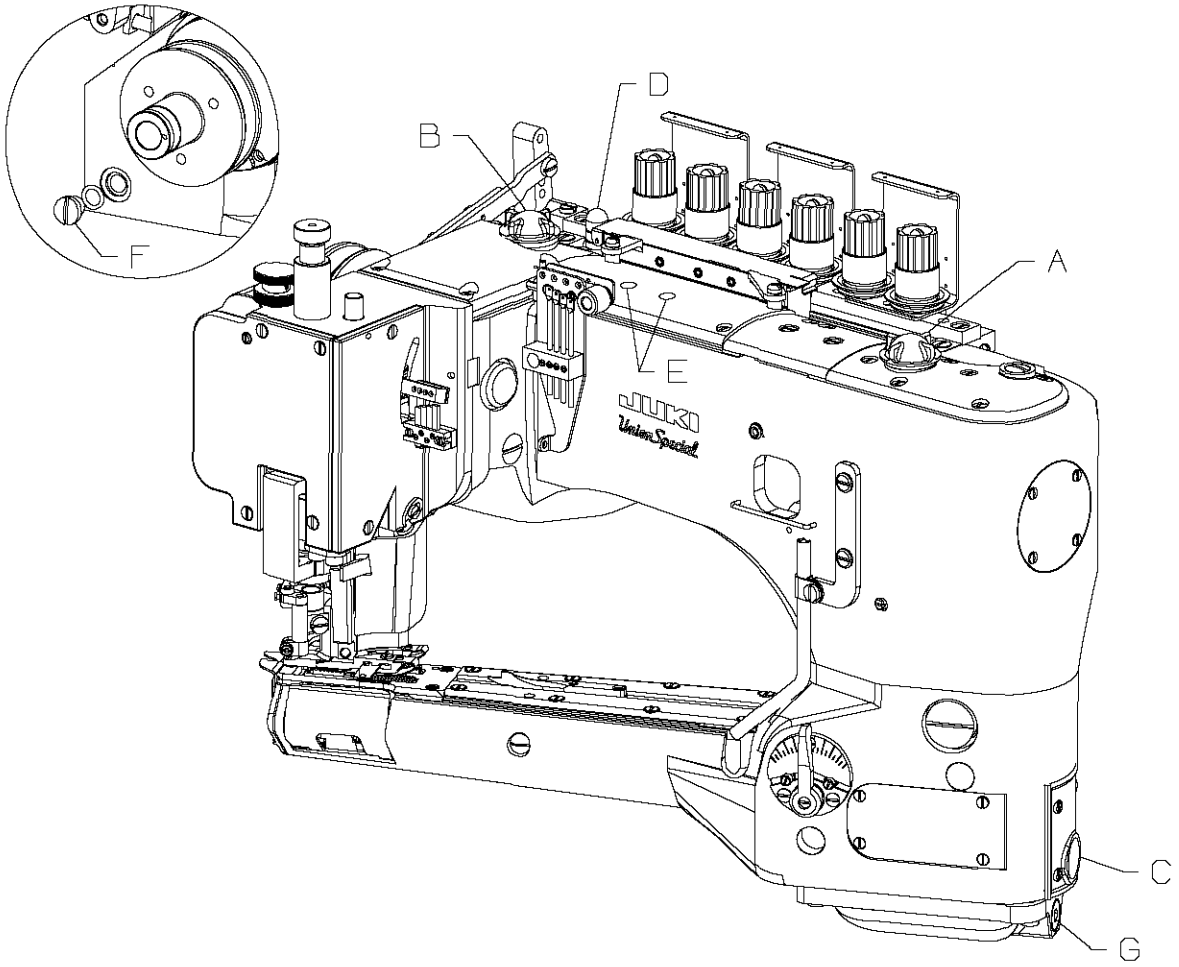

FIG. 1

From the library of: Diamond Needle Corp

Instructions stating direction or location, such as right, left, front or rear of the machine are given relative to the operator's position at the machine unless otherwise noted. The handwheel rotates clockwise in operating direction.

SETTING THE NEEDLE BAR HEIGHT & ALIGNMENT

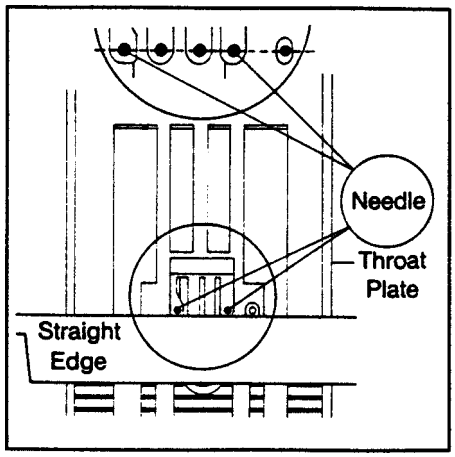

FIG. 2

Insert the first (left) and fourth needles into the needle head. The needles for this Class of machine are made with two flats on the front of the shank. This will enable you to correctly position the needles in the needle head. Make certain the needle shank is fully inserted and that the screw is seated firmly on the flat.

To position the needle head square with the throat plate, use the upper knife or a straight edge to align the needles with the cross grooves in the throat plate. (See Fig. 2)

Refer to table 1 for the dimension from the fourth (lowest) needle to the surface of the throat plate and for the number of the needle bar height gauge.

STYLE	DIMENSION FROM 4TH (LOWEST) NEEDLE TO THROAT PLATE SURFACE	NEEDLE BAR HEIGHT GAUGE NUMBER	NEEDLE HEIGHT GAUGE STEP MARKED
52 GAUGE	17/32" (13.5MM)	21227BU	.531
60 GAUGE	1/2" (12.7MM)	21227DS	.500

TABLE 1

Position the needle bar at its highest point of travel. Loosen needle bar clamp screw (A, FIG.3) & use the specified needle bar height gauge (B) to achieve the desired height dimension from the fourth (lowest) needle (C) to the throat plate surface (D). Tighten clamp screw (A) and recheck setting. Care must be taken not to disturb the needle head alignment while making the adjustment. Add the two middle needles and the retainer.

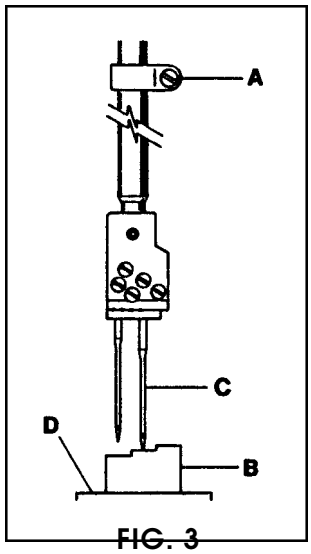

FIG. 3

CAUTION: If the needle head has been replaced it must be torqued to 17 in. lbs. (20cm/kg). After tightening, check for expansion of the needle bar by positioning it up into the lower bushing hole. If the bar has expanded it will bind in the bushing. The bar must be replaced or lapped to reduce the bell shape. Align and set needle bar height as described above.

From the library of: Diamond Needle Corp

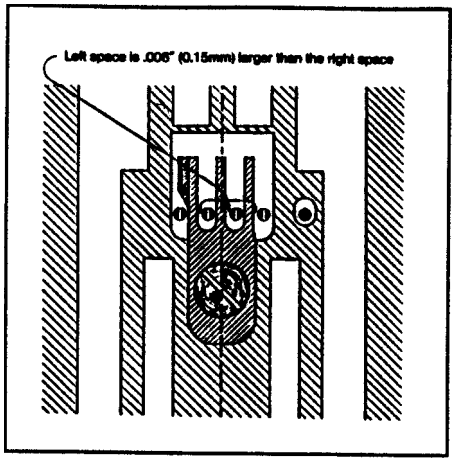

FIG. 4

Correct spacing of the needles in the throat plate stitch tongue is imperative to proper sewing conditions. Improper relationship of the needles to the stitch tongue often results in malformed stitches. When replacing the stitch tongue make sure needles are aligned properly (see Fig. 4).

If the stitch tongue and throat plate are properly seated and the needle position is not correct, the cylinder has probably been forced out of position. If realignment is necessary, refer to the section "Centering the Cylinder".

When the needles are correctly positioned in the throat plate the space to the left of the needles in the stitch tongue slot is .006" (0.15mm) more than the space to the right (see Fig. 4). Actually, the needle bar is centered to the throat plate and cylinder, however, to provide clearance on the left side of the needle for the needle loops passing around the looper during the down stroke of the needles, the slots in the stitch tongue are made off-center to the left. Accurate positioning of the needles may be obtained by repositioning the cylinder.

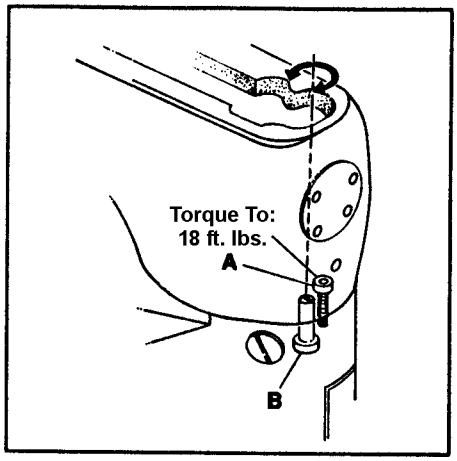

FIG. 5

ALIGNING THE CYLINDER

Remove the top front cover and gasket from the main frame. Loosen cylinder holding screw (A, Fig. 5). Turn eccentric screw (B) clockwise to move the cylinder so the needles are closer to the right side of the stitch tongue. Turn the stud counterclockwise to locate the needles closer to the left. Tighten screw (A) and recheck settings.

NOTE: The cylinder may not move freely when the eccentric is turned because the joint sealant compound has set. Light tapping with a wooden block at the joint or midpoint of the arm may be necessary.

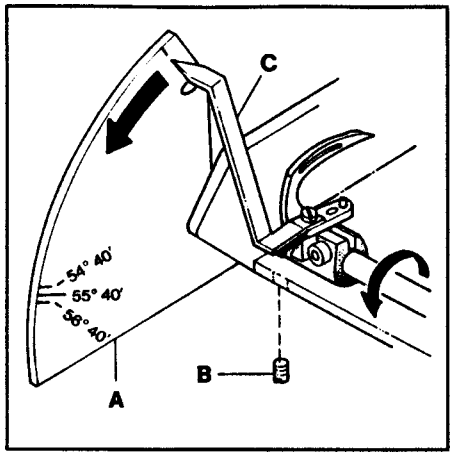

FIG. 6

SETTING THE LOOPER TRAVEL

Attach looper travel gauge plate (A, Fig. 6) to the rear of the cylinder arm. Set the bottom of the gauge so it is approximately horizontal and lock lightly in place with screw (B) directly underneath. Attach looper travel gauge pointer (C) to the looper using the left needle guard screw hole. Turn the handwheel in operating direction until the looper is positioned to the far right. Set pointer (C) at zero degrees by rotating gauge plate (A) and lock in place. Continue turning the handwheel until the pointer stops. If the looper travel is correct the pointer should indicate 55°40'.

From the library of: Diamond Needle Corp

SETTING THE LOOPER TRAVEL

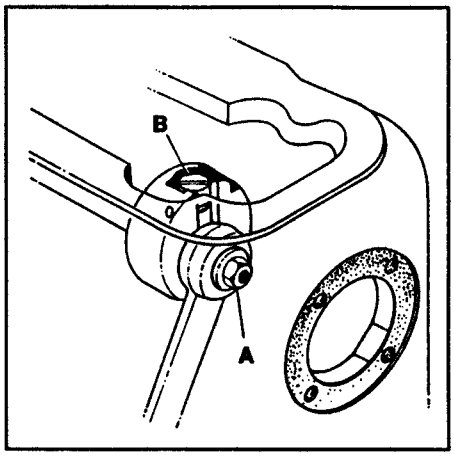

FIG. 7

To adjust the looper travel remove the top front cover and the end cover. Loosen left-handed locknut (A, Fig. 7) and turn screw (B) clockwise to decrease the looper travel or counterclockwise to increase the looper travel. Tighten locknut (A) and recheck setting.

NOTE: After setting the looper travel the machine must be checked for synchronization.

TIMING THE NEEDLES TO THE LOOPER

To visually check the timing of the needles to the looper, turn the handwheel in operating direction until the needle bar has reached its lowest position and has risen 5/32" (4.0mm). At this time the looper point should appear at the same relative position to the needles whether rotation of handwheel is clockwise or counterclockwise.

INSTRUCTIONS FOR USING SYNCHRONIZING GAUGE 21277CG

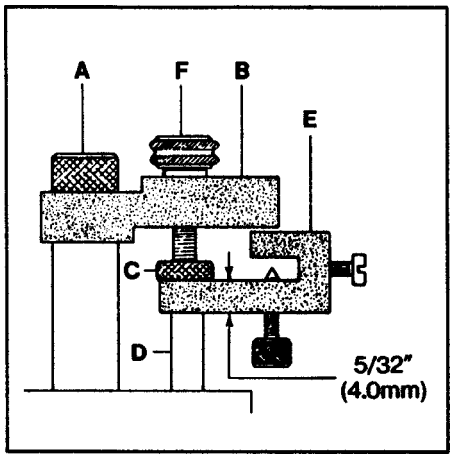

FIG. 8

Turn the handwheel until the needle bar is at its lowest point. Loosen presser bar regulating screw (A, Fig. 8) and insert needle bar setting block (B) under the head of the screw (A) with stop screw (C) above needle bar (D). Tighten screw (A).

The long portion of the looper clamp and height gauge (E, Fig. 8) laid on its side is the 5/32" (4.0mm) gauge used to set the distance between stop screw (C) and the top of the needle bar (D) at its lowest position. Tighten nut (F) to clamp stop screw (C) into place.

From the library of: Diamond Needle Corp

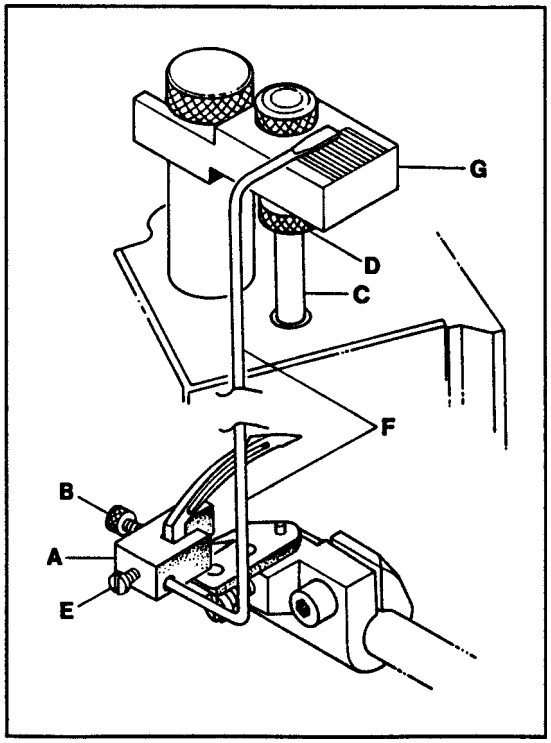

FIG. 9

Attach the looper clamp and height gauge (A, Fig. 9) to the heal of the looper by tightening screw (B). Turn the handwheel slowly in a clockwise direction until needle bar (C) touches stop screw (D). Loosen screw (E) and set synchronizing gauge rod (F) so the flat end is on one of the lines in the center of the block (G). Tighten screw (E).

Turn the handwheel in the opposite direction until the needle bar touches stop screw (D, Fig. 9). Synchronizing rod (F) should come to the same line on block (G). The difference must not exceed one line.

If the setting cannot be achieved, main shaft coupling (A, Fig. 10) must be repositioned. Remove the crank chamber cover and gasket. Loosen the three coupling screws (B). If synchronizing rod (F, Fig. 9) moves more to the right while the handwheel is rotated in a clockwise direction, the looper is too fast and the main shaft should be retarded. If the rod moves more to the right when the handwheel is rotated in a counterclockwise direction the looper is too slow and the mainshaft should be advanced. Tighten screws (B, Fig. 10).

NOTE: If the stationary Knife interferes with the synchronizing rod (F) remove the knife to make the adjustment.

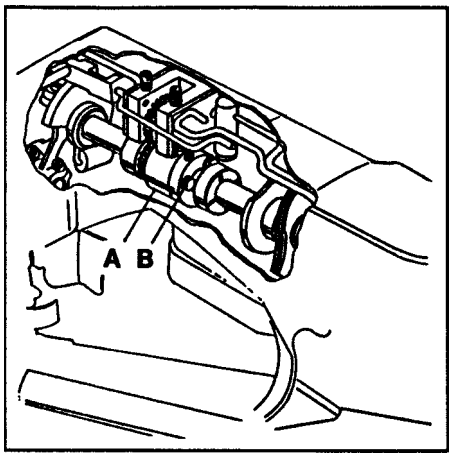

FIG. 10

From the library of: Diamond Needle Corp

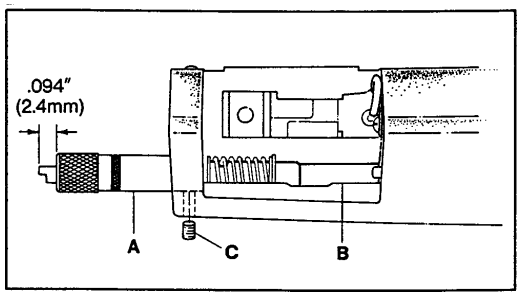

FIG. 11

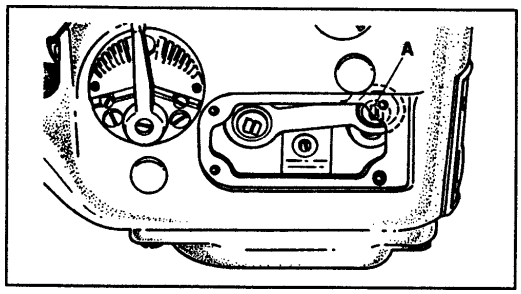

FIG. 12

Looper Avoid

The looper avoid is set at .094" (2.4mm). Using gauge no. 21227BV (A, Fig. 11), position looper shaft (B) fully to the rear (away from operator) and insert the gauge through the looper shaft hole in the end of the cylinder until the plunger is fully extended from the gauge. Tighten clamp screw (C). When the looper is positioned fully to the front, the end of the plunger should be flush with the end of the gauge. The motion of the plunger from the extended position to flush represents .094" (2.4mm) travel. To adjust the looper avoid remove the cylinder cover and loosen screw (A, Fig. 12) with TT-85 wrench. Raise the ball joint to shorten the avoid motion or lower it to lengthen the avoid motion. Tighten screw (A). Reposition gauge (A, Fig. 11) and recheck the setting.

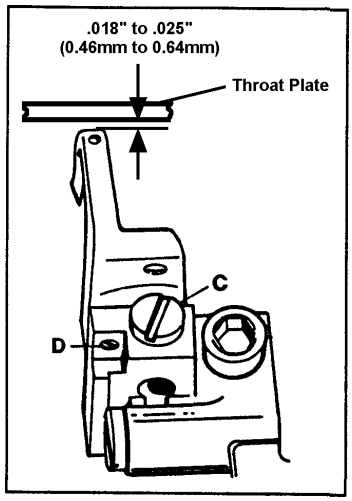

FIG. 13

Vertical Adjustment of Looper

A clearance of .018" to .025" (0.46mm to 0.64mm) should be maintained between the top of the looper and the bottom of the stitch tongue. Loosen screw (C, Fig. 13) and turn screw (D), directly under the looper, up or down as required. Make sure the looper is seated and tighten screw (C). Check for clearance.

From the library of: Diamond Needle Corp

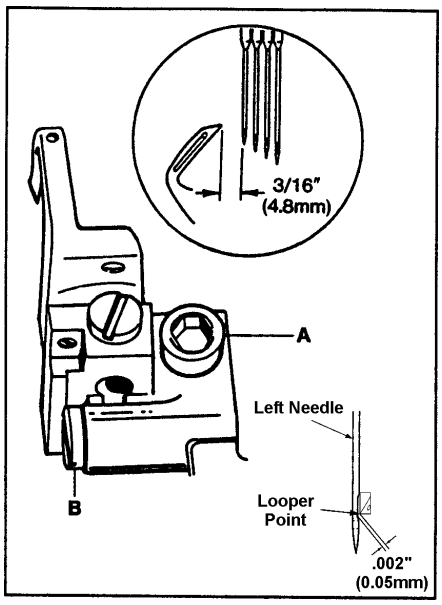

FIG. 15

Looper Gauge

Turn the handwheel in operating direction until the looper has traveled fully to the left. Loosen screw (A, Fig. 15) and move the looper holder to the right or left until the distance from the point of the looper to the center of the first (left) needle is 3/16" (4.8mm). Clearance between the looper point and the scarf of the needle must not exceed .002" (0.05mm). Turn screw (B) until the .002" (0.05mm) dimension is achieved. Tighten screw (A).

NOTE: Looper gauge may need to be increased or decreased slightly to obtain a proper stitch.

SETTING THE FRONT NEEDLE GUARD

Install needle guard (A, Fig. 16) and position it to touch but not deflect the first needle. Slowly turn the handwheel in operating direction and check the needles to make sure they are not pinched between the looper and the needle guard.

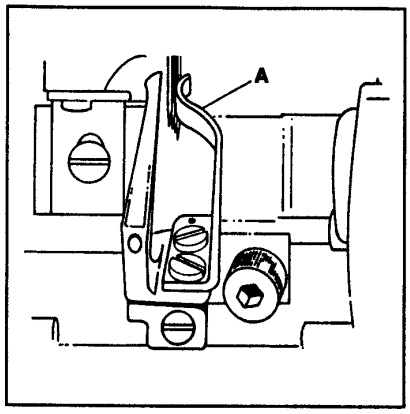

FIG. 16

SETTING THE FEED DOGS

Preliminary Setting:

Install the differential feed dog (A, Fig. 17) with screw (B). Attach rear needle guard (C) to main feed dog (D), pushing in fully to the rear and tighten screw (E). Install main feed dog with screw (F).

As a starting point loosen screw (G) and set the slot in feed bar eccentric stud (H) in a horizontal position. Tighten screw (G). At the highest point of travel feed dogs (A and D) should be the depth of one full tooth above throat plate (J). Loosen screws (B and F) and adjust the height of each feed dog by moving them up or down in the elongated slot of the shank. Tighten screws (B and F). Loosen screw (G) and turn stud (H) until the top of the feed dogs are parallel to the throat plate. Rotating stud (H) will simultaneously level both feed dogs.

NOTE: When setting eccentric stud (H) if turned clockwise feeddogs should go up if turned counterclockwise feed dogs should go down.

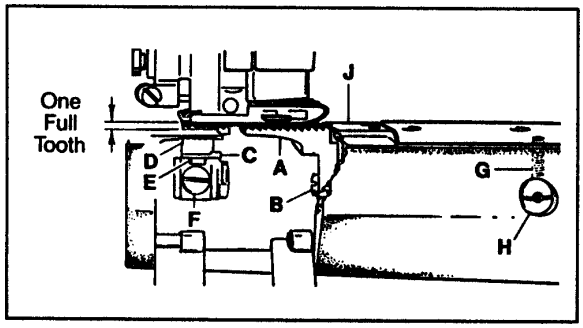

FIG. 17

Final Setting:

Both the main and differential feed dogs may be individually adjusted to height. Main feed dog (D) at its highest position should rise above the top of the throat plate the depth of one full tooth when the normal presser spring pressure is applied. The differential feed (A) may then be raised to it.

From the library of: Diamond Needle Corp

SETTING THE REAR NEEDLE GUARD

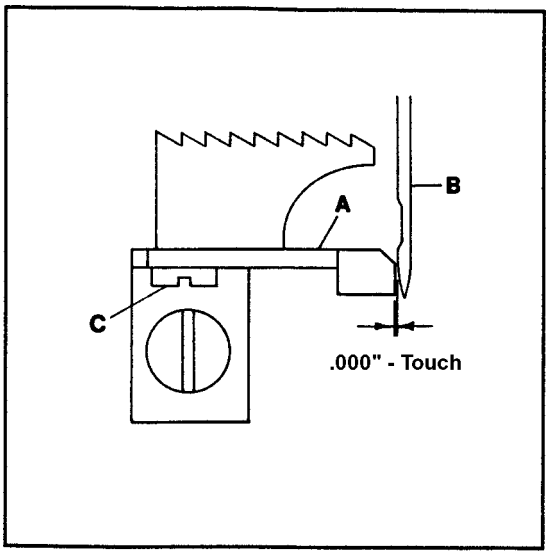

FIG. 18

Set rear needle guard (A, Fig. 18) so it touches the first (left) needle (B) but does not deflect. Check the guard position to the other needles to avoid pinching. Loosen screw (C) and reposition guard (A) as necessary. Tighten screw (C).

SETTING THE STITCH LENGTH

This machine is designed to sew 10 to 16 stitches per inch. The normal factory setting is 12 stitches per inch. To change the stitch length remove the plug screw located directly above the cylinder side cover. Loosen screw (A, Fig. 19) in lever (B) and move up to increase the stitch length or down to decrease the stitch length. Tighten screw (A) and replace the plug screw.

CAUTION: If the stitch length is changed the rear needle guard setting must be checked and readjusted if necessary. Failure to do so may result in needle and/or parts breakage.

CAUTION: When making stitch length adjustment do not exceed maximum recomended stitch length due to possible part damage.

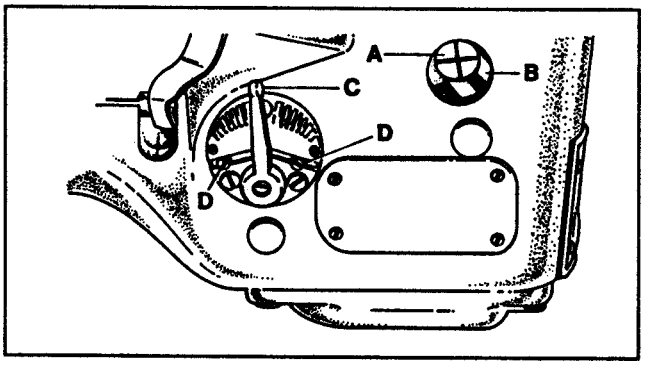

FIG. 19

DIFFERENTIAL FEED CONTROL

The amount of differential feed is controlled by lever (C, Fig. 19). The adjusting plate is numbered from 1 to 9. When the lever is set from numbers 1 to 4 reverse differential or stretching occurs. The numbers from 4 to 5 produce equal feed stitching while numbers 5 to 9 produce a gathering stitch. The two stop screws (D) can be set to limit the movement of lever (C) or lock the lever in one position.

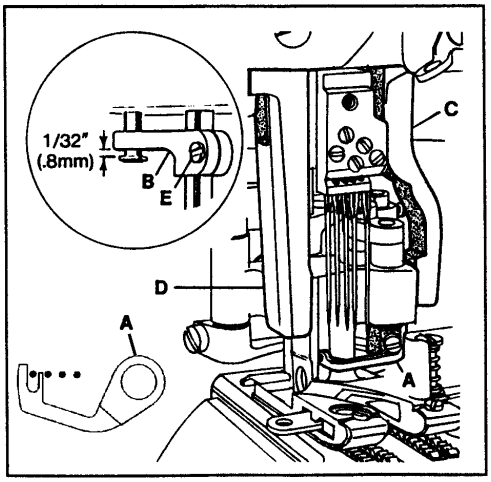

FIG. 20

SETTING THE PRESSER FOOT

Remove the presser bar regulating screw and the presser spring. Raise the needle bar to its highest position and remove the retainer. As the foot is slipped under the needles, swing the upper knife into the opening on the right side of the foot and slide the linkage onto the hook driving sleeve. Insert the presser bar through the linkage and into the presser foot shank. Tighten presser foot screw. With the presser bar inserted properly into the presser foot, position the foot left to right so the finger of cover thread carrier (A, Fig. 20) is between the first and second needles. Set presser bar guide (B, Fig. 20 Inset) so foot will not move. Set right presser foot guide (C) and left presser foot guide (D) to maintain setting. Loosen presser bar guide screw (E Fig. 20 Inset) and check to see that foot has vertical freedom with no right to left play, no bind. Put the needle bar is in its lowest position, and set 1/32"(0.8mm) above head of presser bar guide stud. Tighten presser bar guide screw (E).

From the library of: Diamond Needle Corp

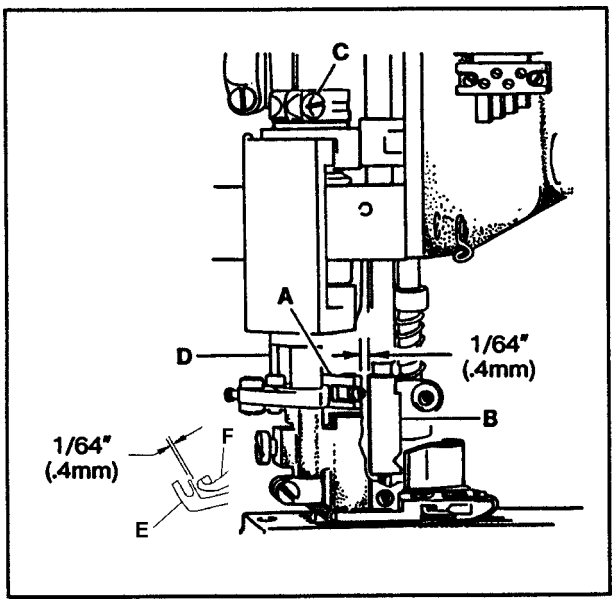

FIG. 21

Turn the handwheel in operating direction until link (A, Fig. 20) has traveled fully to the front. There must be a 1/64" (0.4mm) clearance between link (A) and the back of needle head (B) when link (A) starts to jackknife. Loosen screw (C) and rotate driving sleeve (D) to position link (A). Tighten screw (C).

Add the cover thread hook(F) and cover thread carrier(E) if they are not in place. Position carrier so the thread loop will be carried behind the first two needles. There should be a minimum 1/64"(0.4mm) clearance between the hook and the carrier at their closest position.

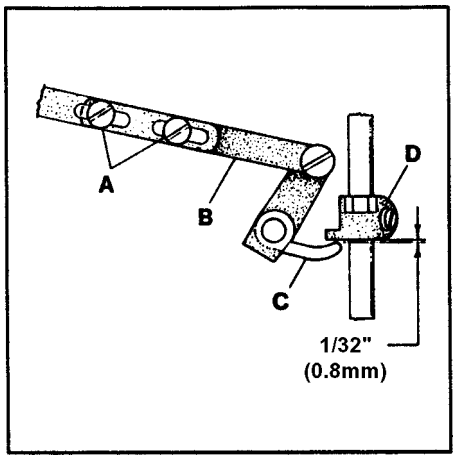

FIG. 22

Replace the presser spring and the presser bar regulating screw. Loosen screws (A, Fig. 22) in lifter lever link assembly (B) and position lever (C) so there is 1/32" (0.8mm) clearance between it and presser bar guide (D) when the feed dogs are below the throat plate.

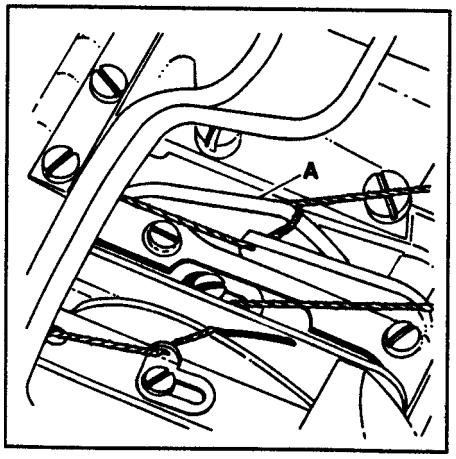

FIG. 23

When the hook swings to the left it will pass over the cover thread. On its return travel, the thread will "pop" into the slot on the underside of the hook and is carried to the right. This thread forms a triangle for the third and forth needle threads to pass through. As the cover thread "pops" into the slot it must cast-off the high point of take-up (A, Fig. 23) at the same time. Loosen the two screws in the cover thread take-up and reposition if necessary. If there is difficulty in making this adjustment, check the thread tension and make sure the hook point has an extremely high polish and the angle is correct. Due to clearance requirements bending the hook is not recommended.

From the library of: Diamond Needle Corp

SETTING THE PRESSER FOOT (CONT.)

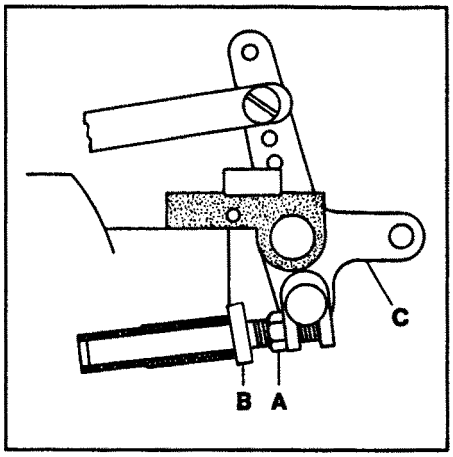

FIG. 24

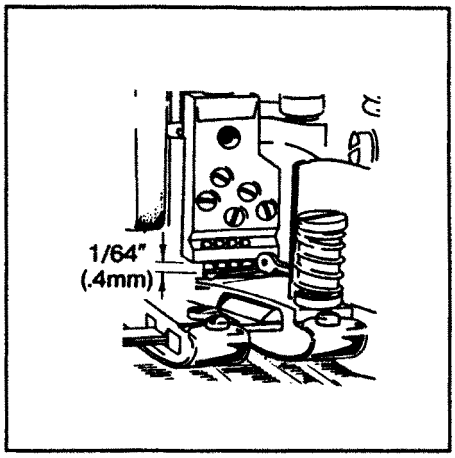

FIG. 25

The presser foot lifter stop plunger must be set so the cover thread hook will not hit the bottom of the needle head as the presser foot is being lifted. Position the needle bar to its lowest point of travel. Loosen nut (A, Fig. 24) and turn plunger (B) clockwise until it strikes the crankshaft counterweight. While applying pressure to lifter (C) to lift the foot, back out of the plunger until the distance between the hook and the underside of the needle head is 1/64" (0.4mm) (see Fig. 25). Tighten nut (A, Fig. 24).

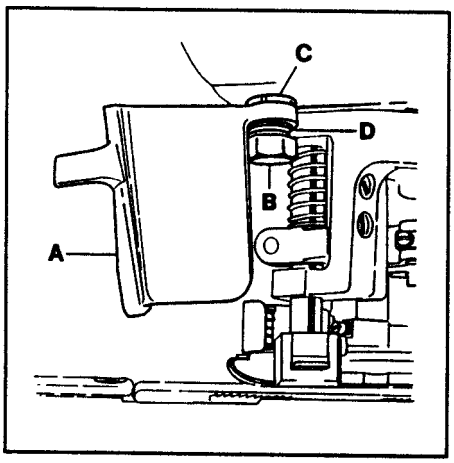

FIG. 26

To adjust the position and tension of frame chip guard (A, Fig. 26), slightly loosen screw (B) and turn washer (C) with 21388Y spanner wrench until spring (D) snaps the guard into the closed position. Tighten screw (B). A light resistance should be felt when opening the guard.

SETTING THE KNIFE DRIVE LEVER

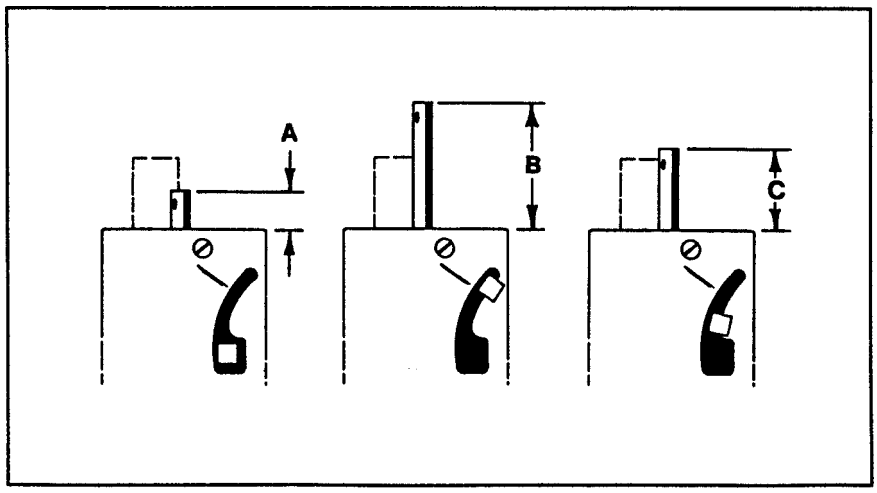

FIG. 27

Position the needle bar at the bottom of its stroke. Measure from the top of the needle bar to the top of the casting to obtain dimension "A" (see Fig. 27).

Position the needle bar at the top of its stroke. Measure from the top of the needle bar to the top of the casting to obtain dimension "B". Subtract dimension "A" from dimension "B" and divide by two. Add this number to dimension "A" to obtain "C". Set a caliper to the "C" dimension and turn the handwheel in operating direction until the height of the needle bar is at the "C" dimension

From the library of: Diamond Needle Corp

SETTING THE KNIFE DRIVE LEVER (CONT.)

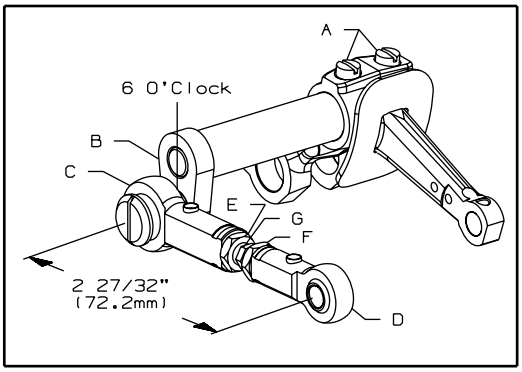

FIG. 28

At this time the knife drive lever should be in the 6 o'clock position. If adjustment is necessary, loosen screws (A, Fig. 28) in the needle lever and reposition knife drive lever (B) to the 6 o'clock position. Tighten screws (A). The dimension between the centerline of right and left knife drive connection ball joints (C and D) must be 2 27/32" (72.2mm). Loosen left hand thread nut (E), right hand thread nut (F) and turn connecting rod (G) until dimension is achieved. Tighten nuts (E and F).

SETTING THE TRIMMING KNIVES FOR LAP SEAMING (ALL STYLES)

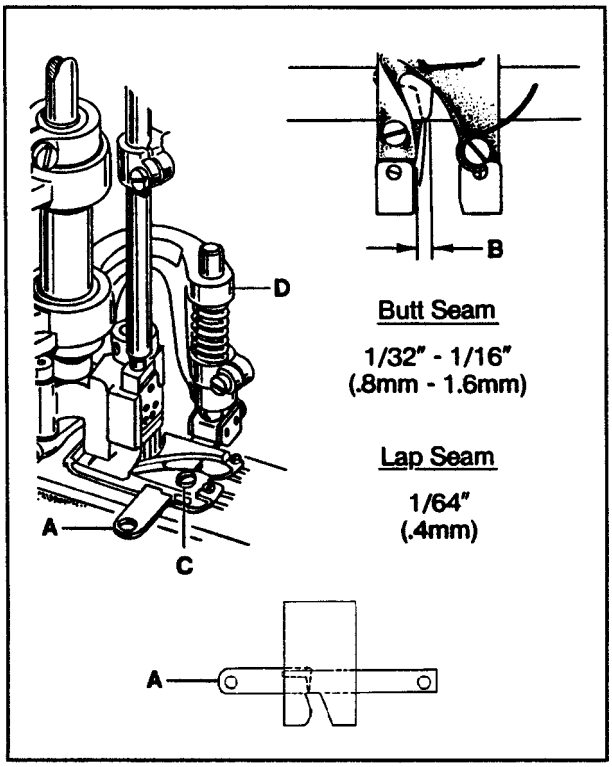

FIG. 29

To make the adjustments for a lap seam, position lower knife (A, Fig. 29) in the foot so it extends 1/64" (0.4mm) past the right side of the left toe (B) (approximately even with the first needle). Loosen screw (C) and move knife in or out as required. Tighten screw (C) securely.

Turn handwheel in operating direction until knife driving bracket (D) is positioned to the extreme left. At this time the front edge of both knives should be parallel with each other and the upper knife cutting edge should overlap lower knife cutting edge by 1/64" (0.4mm).

From the library of: Diamond Needle Corp

SETTING THE TRIMMING KNIVES (ALL STYLES) (CONT.)

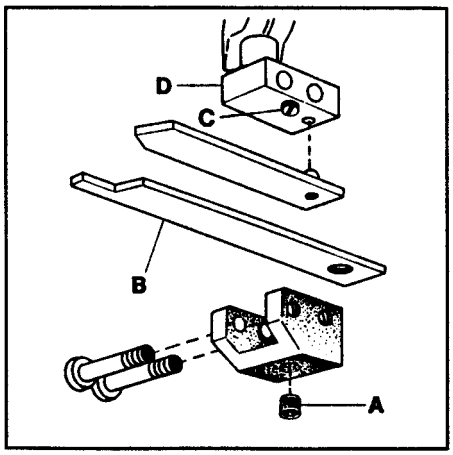

FIG. 30

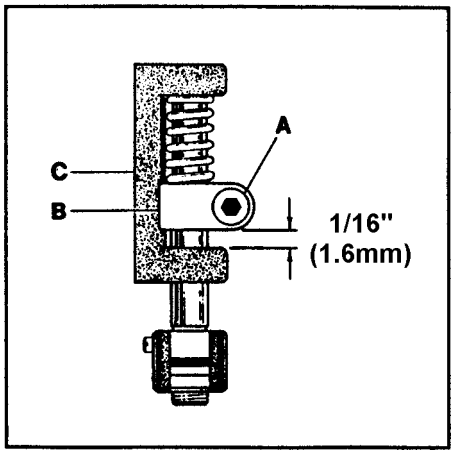

FIG. 31

If necessary loosen screw (A, Fig. 30) and move knife (B) to the right or left as required. Tighten screw (A).

If the shear angle between the knives has to be changed, raise or lower screw (C, Fig. 30) in knife holder shank (D).

To set spring pressure between the knives loosen screw (A, Fig. 31) and raise knife holder guide collar (B) 1/16" (1.6mm) from knife driving bracket (C). Tighten screw (A).

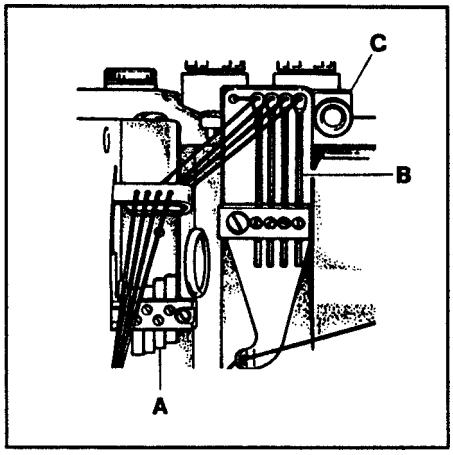

FIG. 32

NOTE: More or less spring pressure may be required depending on the type of material being sewn. Also, both knives may have to be repositioned after a trial seam is made so there is an equal margin from the edges of the two plies to the center rows of stitching.

NEEDLE THREAD ADJUSTMENTS

Four needle thread strike-off pins (A, Fig. 32) are provided for independent needle thread control. Level the take-ups to the height of the thread in the needle lever eyelet at its lowest position. Raise the first take-up (nearest the operator) 1/8" (3.2mm) and the second take-up 1/16" (1.6mm). Further adjustment may be necessary to obtain proper needle loop size so skipped stitches may be avoided.

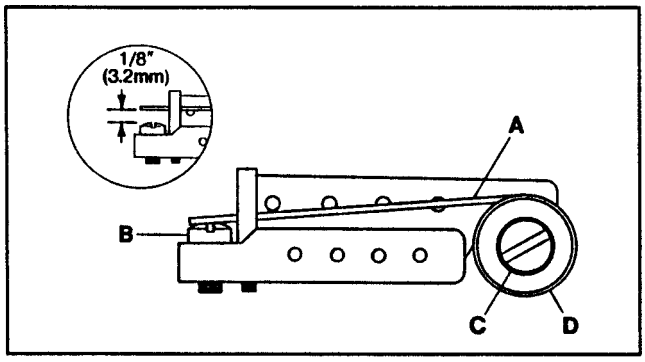

FIG. 33

Set the four frame needle thread eyelets (B, Fig. 32) eye with the eyelets in holder (C). Adjust as necessary so the needle thread loops around the looper will remain firm and not seek random positions when the needle bar descends.

Unlocking spring (A, Fig. 33) provides a propor tional amount of pull-up of the needle threads when the machine is reversed for unlocking the stitch so the loops will not form on the front of the needles and become caught by the looper.

NOTE: Unlocking spring is only used when starting and stopping on the material.

Turn screw (B) up or down so unlocking spring (A) will have 1/8" (3.2mm) drop from the bottom of the thread holes to the top of screw (B). Loosen screw (C) and turn knurled knob (D) to adjust the spring tension. Tighten screw (C).

Tension of the six threads is individually controlled. The needle tension is seldom uniform; the first needle thread having more tension than the other three. Use only enough tension to pull up the stitch. A well-balanced stitch will have the first and fourth needle loops pulled up and the second and third needle loops small and even.

From the library of: Diamond Needle Corp

LOOPER THREAD ADJUSTMENT

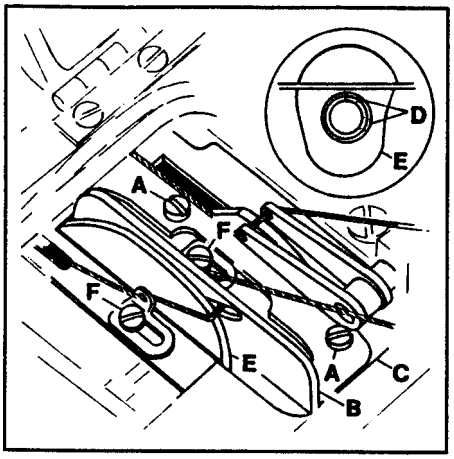

FIG. 34

Loosen screws (A, Fig. 34) and position looper thread cast-off (B) flush with the right end of cast-off support plate (C). Tighten screws (A). Loosen screws (D, Fig. 34 inset) and time take-up (E) so the thread will cast-off when the needle bar has descended 7/64" (2.8mm) from its highest position. When thread eyelets (F) are moved further to the left the amount of thread pull-off will increase.

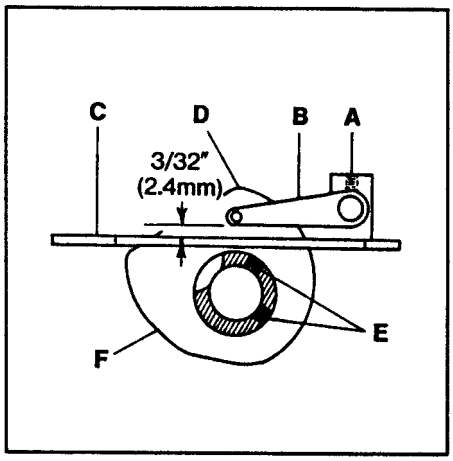

FIG. 35

COVER THREAD ADJUSTMENT

Loosen screw (A, Fig. 35) and set the lower edge of cover thread take-up eyelet (B) so its 3/32" (2.4mm) above the surface of cast-off plate (C). Tighten screw (A). As the cover thread hook moves to the left over the cover thread and the needle bar starts to rise, the cover thread must "cast-off" from the high point of take-up (D). Loosen screws (E) and adjust take-up (F) accordingly. make sure that take-up (F) is centered in cast-off plate slot (C) and take-up eyelet (B) is centered to take-up (F). Tighten screws (E).

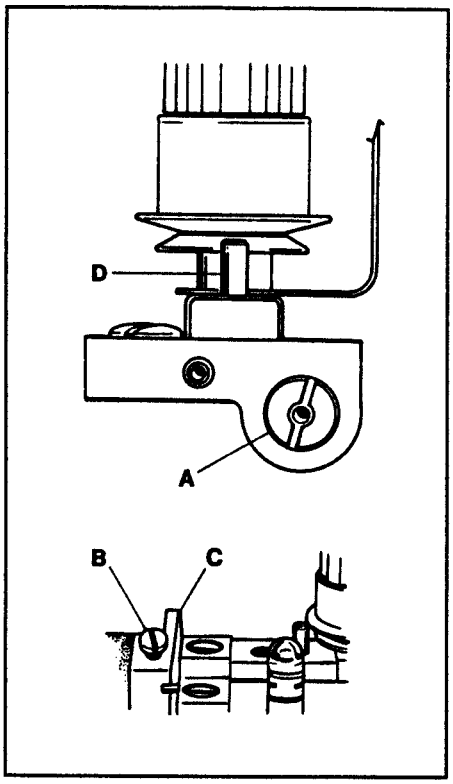

FIG. 36

TENSION RELEASE

The tension releaseshould start to function when the presser foot has raised approximately 1/32" (0.8mm) above the surface of the throat plate and be entirely released when the presser foot has reached its highest position. Insert a large screwdriver into slot on the right end of shaft (A, Fig. 36), loosen screw (B) in lifter lever (C) and turn the screwdriver to raise or lower pins (D). Tighten screw (B).

NOTE: Make sure the 1/32" (0.8mm) clearance between the presser bar lifter lever and presser bar guide has been maintained. Refer to Fig. 22 if readjustment is necessary.

From the library of: Diamond Needle Corp

HUNG FOOT ADJUSTMENT

When sewing on extremely lightweight material and/or feed cutting is a problem, the presser foot may be "hung" by raising stud (B) until guide (A) rests on the shoulder of stud (B). This adjustment will raise the presser foot slightly, so only the pressure of the presser foot shoes contact the material. Turn handwheel in operating direction until the feed dogs are below the throat plate surface. At this time there should be a 1/32" (0.8mm) clearance between the bottom of presser bar guide (A, Fig. 37) and presser bar guide stud (B). To hang presser foot, loosen lock nut (C Fig. 37) and turn thumbscrew (D Fig. 37) so that the foot comes up slightly, tighten nut (C Fig. 37).

SETTING THE LAP FORMER

Attach gibs (A, Fig. 38) to the cylinder cover but do not tighten screws (B); leave them snug for further adjustment. Fasten spring (C, Fig. 38 inset) to the bottom of slide block (D) and insert between gibs (A). Attach lap former (E) to slide block (D) with screws (F) and position it in the center of the presser foot. Position the slide block so it has a snug (but not tight) fit the entire length of the gibs. Tighten screws (B).

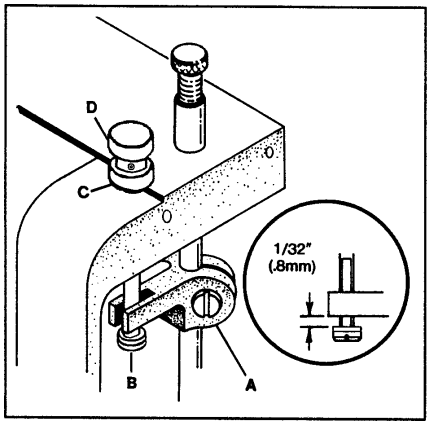

FIG. 37

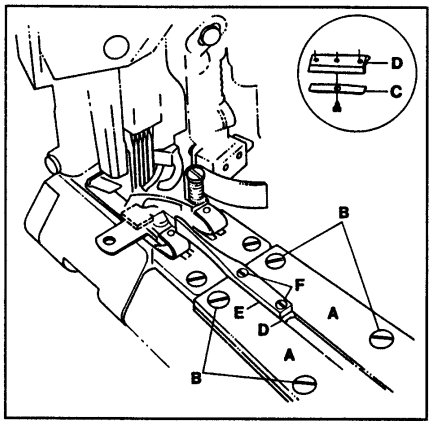

FIG. 38

LAP SEAMING

Lap Seaming can be accomplished using three methods:

1. Lap Seaming cutting two plies of material.
   - A. Remove butt seam presser foot and replace with lap seam presser foot. Refer to pages 15, 16, & 17 for presser foot adjustments.
   - B. Attach lap former and slide block with spring. See above for adjustments.

2. Lap seaming cutting only right ply of material.
   - A. Use butt seam presser foot.
   - B. Remove front right throat plate screw and attach 36203 edge guide with 22849 screw, and adjust left or right for proper coverage on bottom.
   - C. Adjust knives left or right for proper trimming and coverage on top.

3. Lap seaming cutting only left ply of material.
   - A. Use butt seam presser foot.
   - B. Remove left front throat plate screw and attach 36203 edge guide with 22849 screw, and adjust left or right for proper coverage on bottom.
   - C. Adjust knives left or right for proper trimming and coverage on top.

From the library of: Diamond Needle Corp

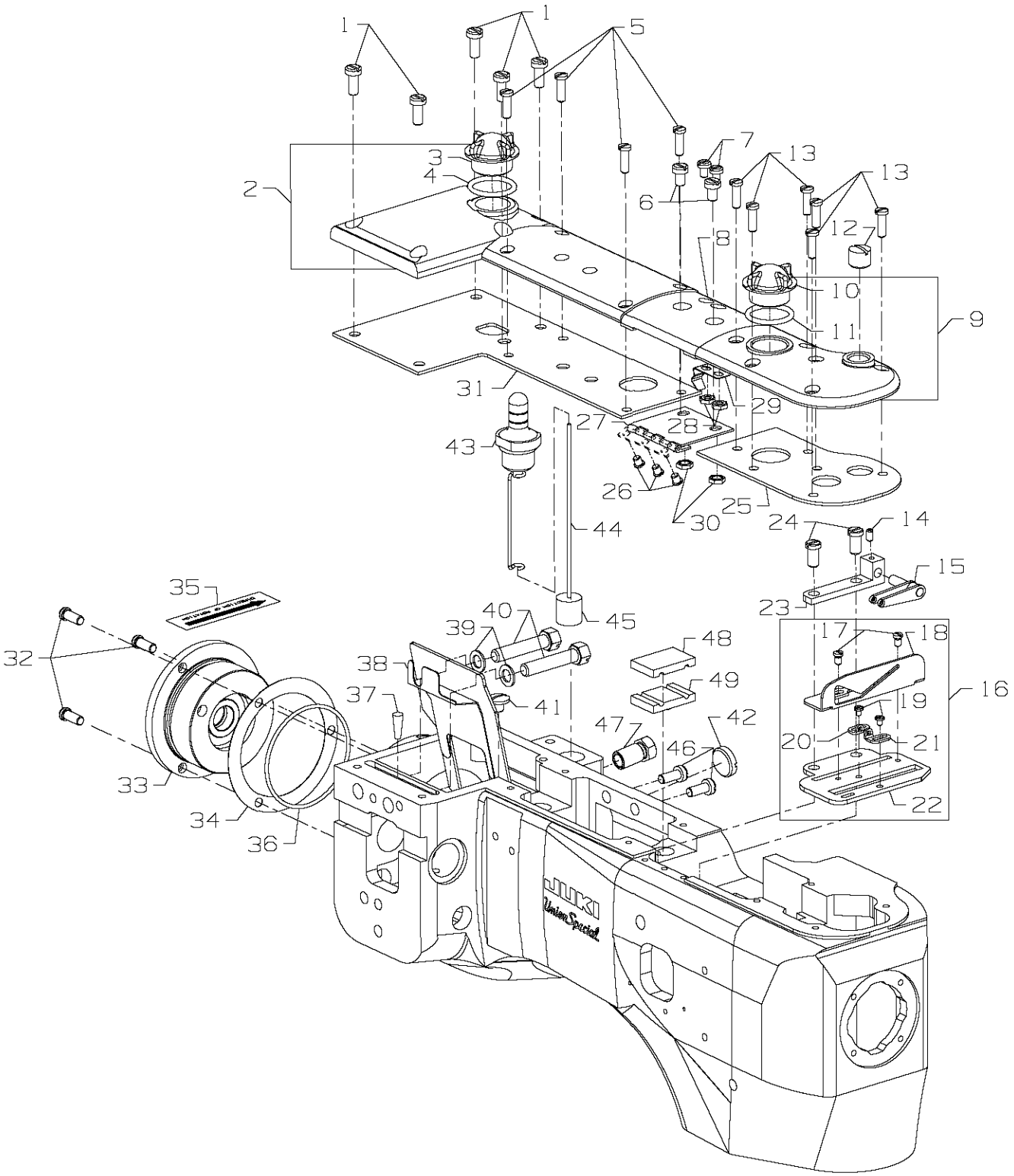

From the library of: Diamond Needle Corp

OIL SIGHT GAUGES, TOP COVERS & MISCELLANEOUS TAKEUP & EYELET PARTS

Ref. No.	Part No.	Description	Amt. Req.
1.	93	Screw, for crank chamber cover	5
2.	35888N	Crank Chamber Cover	1
3.	B3530555000	Oil Sight Gauge	1
4.	660-212	"O"Ring	1
5.	22516A	Screw	4
6.	93A	Screw, for middle top cover	2
7.	90	Screw, for spring	2
8.	35887X	Top Cover, middle	1
9.	35887AE	Top Cover, front	1
10.	B3530555000	Oil Sight Gauge	1
11.	660-212	"O"Ring	1
12.	22539M	Plug Screw	1
13.	22516A	Screw, for front top cover	6
14.	73C	Screw	1
15.	36256	Cover Thread Take-up Eyelet	1
16.	29476XC	Cast-Off Plate Assembly	1
17.	22KH	Screw, for cast-off	2
18.	36204	Cast-off	1
19.	73A	Screw, for cast-off plate eyelets	2
20.	52958F	Cast-off Plate Eyelet, rear	1
21.	52958C	Cast-off Plate Eyelet, front	1
22.	36204A	Cast-off Plate	1
23.	36256A	Cover Thread Take-up Eyelet Holder	1
24.	22839	Screw	2
25.	36284T	Gasket, for front top cover	1
26.	22564B	Screw, for middle cover hinge	3
27.	35887R	Middle Cover Hinge	1
28.	41071G	Nut, for top middle cover spring screw	2
29.	35887M	Spring, for middle top cover	1
30.	12934A	Nut, for top middle cover spring screw	2
31.	36284M	Gasket, for crank chamber	1
32.	22569B	Screw, for bushing housing	1
33.	36290F	Bushing Housing, includes bushing	1
34.	56390E	Gasket, for bushing housing	1
35.	LA528	Directional Label	1
36.	660-935	"O"Ring	1
37.	CO67E	Cork	1
38.	36289K	Oil Shield	1
39.	6042A	Washer, for screw	2
40.	22759A	Screw, for connecting head to main frame	2
41.	22711	Screw, for oil wick	1
42.	22539AA	Plug Screw	1
43.	36293B	Oil Sight Gauge	1
44.	36293E	Oil Level Indicator	1
45.	39593C	Oil Gauge Float	1
46.	93	Screw, for oil pump housing	2
47.	35890P	Bushing	1
48.	35893G	Seal, Upper	1
49.	35893H	Seal, Lower	1

From the library of: Diamond Needle Corp

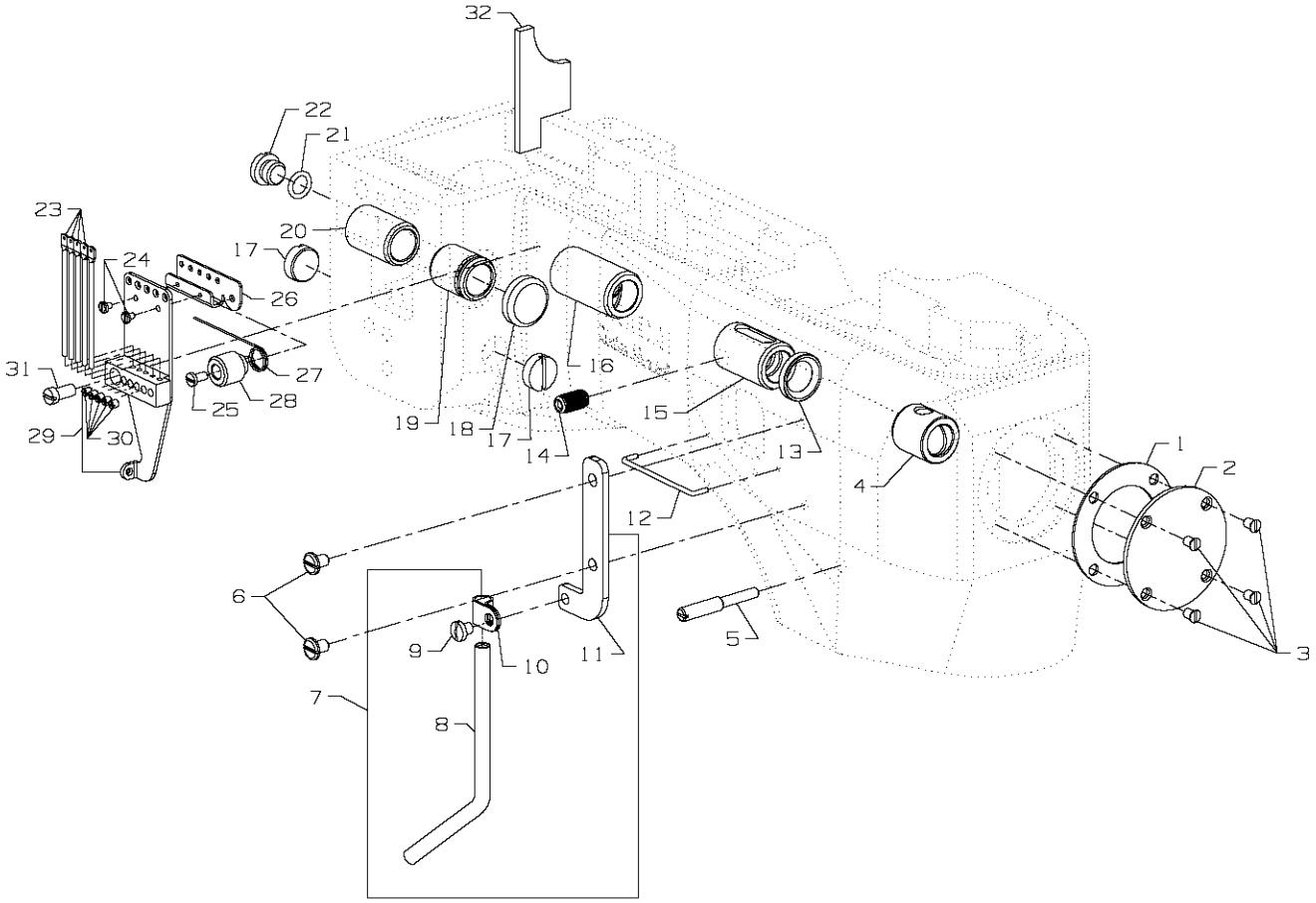

From the library of: Diamond Needle Corp

MAIN FRAME, BUSHINGS & MISCELLANEOUS EYELET & COVER PARTS

Ref. No.	Part No.	Description	Amt. Req.
1.	36284S	Gasket, end cover	1
2.	35887Z	End Cover	1
3.	22564B	Screw, end cover	4
4.	36290B	Main Shaft Bushing, front	1
5.	22791D	Screw, for looper drive lever shaft	1
6.	22829	Screw, looper thread shield	2
7.	29105BH	Looper Thread Shield	1
8.	35866A	Tube	1
9.	SS7110510SP	Screw	1
10.	35866B	Tube Clamp	1
11.	35883AL	Support	1
12.	35781D	Looper Thread Guide Wire	1
13.	660-1132	Oil Seal	1
14.	62271B	Thread Guide	1
15.	36290G	Main Shaft Bushing, rear	1
16.	35890E	Crankshaft Bushing, front	1
17.	22539T	Plug Screw	2
18.	35761D	Bushing Cap	1
19.	36260B	Needle Lever Shaft Bushing, front	1
20.	36260C	Needle Lever Shaft Bushing, rear	1
21.	660-206	Rubber “O” Ring	1
22.	22733B	Oil Drain Screw	1
23.	36271A	Needle Thread Eyelet	4
24.	73A	Screw, for needle thread eyelet	2
25.	22768B	Screw, for unlocking spring height adjusting	1
26.	36271G	Stitch Unlocker Mounting Bracket	1
27.	36271E	Unlocking Spring	1
28.	36271H	Spring Holder	1
29.	36271	Frame, Needle Thread Eyelet	1
30.	28C	Screw	4
31.	22596D	Screw, for needle thread eyelet	1
32.	36293N	Felt	1

From the library of: Diamond Needle Corp

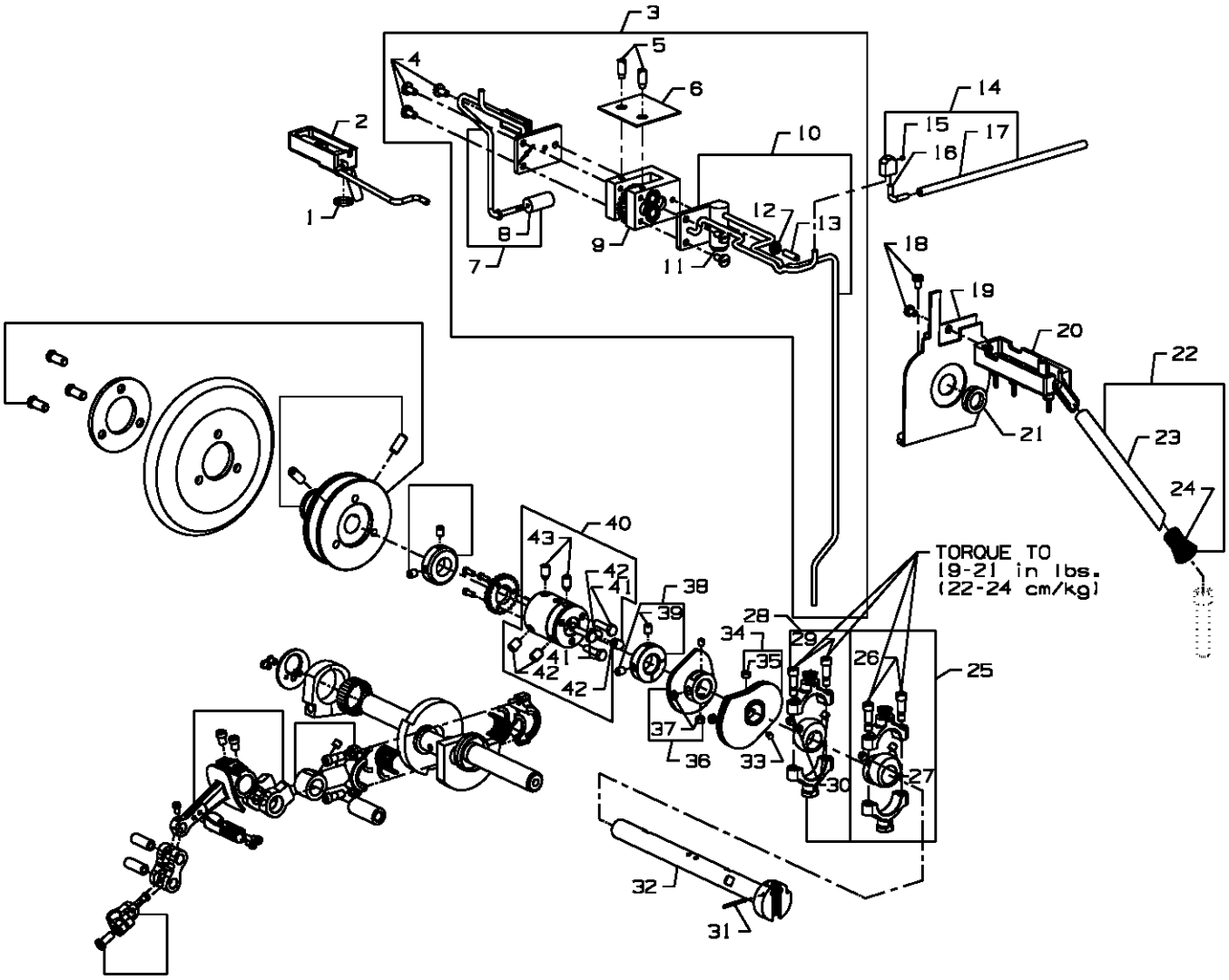

From the library of: Diamond Needle Corp

MAIN SHAFT & MISCELLANEOUS OILING

Ref. No.	Part No.	Description	Amt. Req.
1.	660-207	Oil Seal Ring	1
2.	36294D	Oil Reservoir, back	1
3.	29472Y	Pump Assembly	1
4.	22585A	Screw, for housing cover	5
5.	21756G	Vent Screw	2
6.	35897BW	Gasket	1
7.	36297J	Housing Cover and Oil Tube, rear	1
8.	35897BV	Intake Filter	1
9.	29472AC	Pump Body and Gear Assembly	1
10.	36297M	Housing Cover and Oil Tube, front	1
11.	22571B	Plug Screw	1
12.	41071G	Nut	1
13.	22565A	Screw	1
14.	36293M	Oil Splitter	1
15.	1096	Screw	1
16.	36293L	Oil Tube	1
17.	50393-140	Tubing	1
18.	90	Screw, for take-up shield	2
19.	36261A	Take-up Shield Assembly	1
20.	35894L	Oil Reservoir, front	1
21.	666-338	Oil Seal Ring	1
22.	36293K	Oil Tube Bypass	1
23.	671B3	Air Tube	1
24.	11550209	Tension Spring	1
25.	29101J	Feed Drive Eccentric Assembly	1
26.	22587E	Screw	2
27.	22894W	Set Screw	2
28.	29103T	Feed Lift Eccentric Assembly	1
29.	22587E	Screw	2
30.	22894W	Set Screw	2
31.	660-219P	Roll Pin	1
32.	36222C	Main Shaft	1
33.	22801	Screw	2
34.	36223	Double Disc Take-up	1
35.	22580	Screw	2
36.	36223A	Cover Thread Take-up	1
37.	22580	Screw	2
38.	35895Y	Crankshaft Thrust Collar	1
39.	22894AM	Screw	2
40.	35895X	Main Shaft Coupling	1
41.	22519F	Screw	3
42.	22894J	Set Screw	4
43.	22894K	Spot Screw	2

From the library of: Diamond Needle Corp

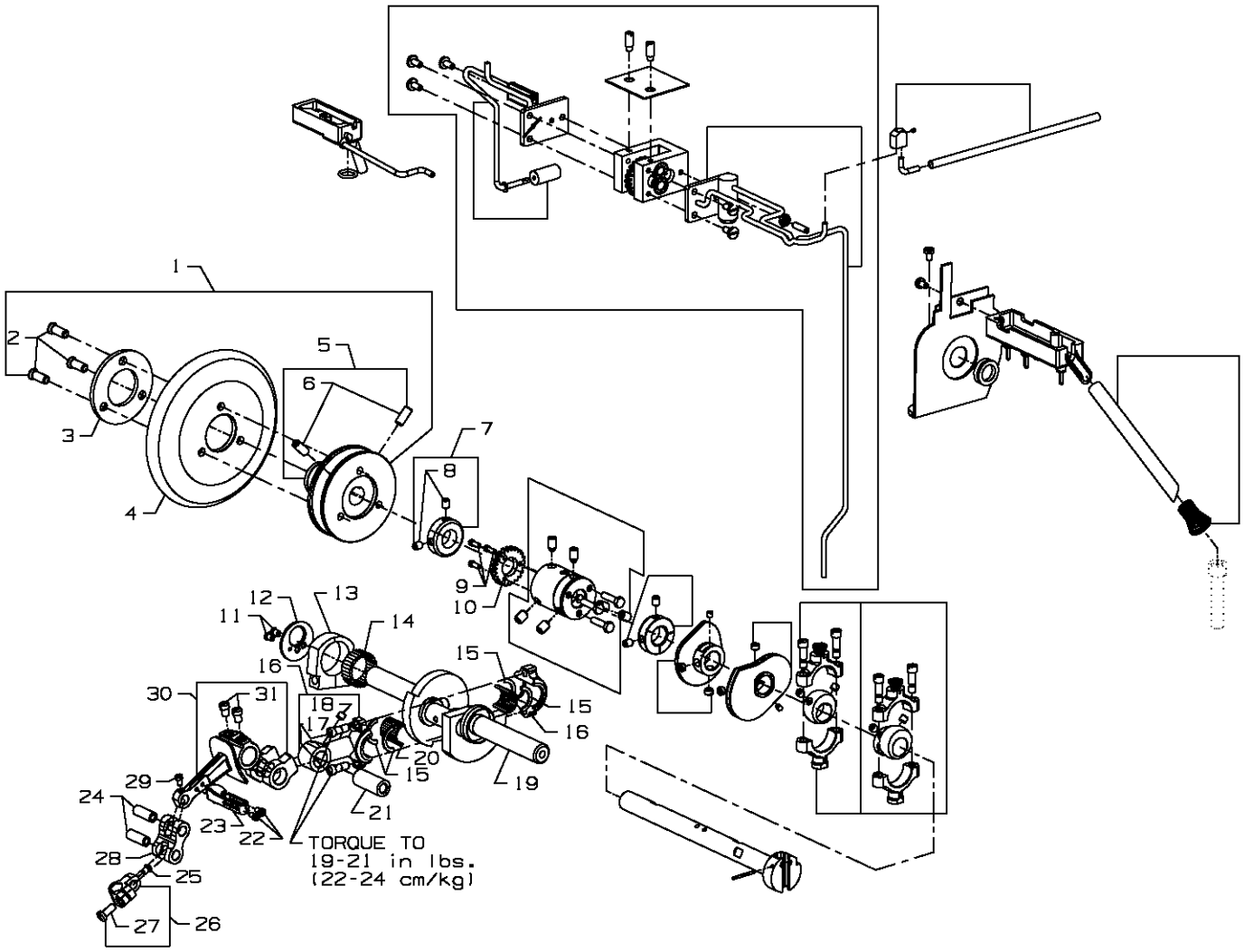

From the library of: Diamond Needle Corp

CRANKSHAFT & NEEDLE LEVER PARTS

Ref. No.	Part No.	Description	Amt. Req.
1.	36221N	Pulley Assembly	1
2.	22574	Screw	3
3.	61321L	Clamp Plate	1
4.	61321J	Handwheel	1
5.	36221M	Pulley	1
6.	22894E	Screw, for adjustable pulley	2
7.	35895Y	Crankshaft Thrust Collar	1
8.	22894AM	Screw	2
9.	22797	Screw	3
10.	35897BY	Pump Driving Gear	1
11.	22766	Screw	2
12.	36251N	Needle Bearing Retaining Plate	1
13.	36251M	Eccentric Bearing	1
14.	36263	Needle Bearing Rollers	28
15.	35763G	Needle Bearing Retaining Ring	4
16.	35862A	Needle Lever Connecting Rod	1
17.	22587B	Screw	2
18.	22894W	Screw	1
19.	36222A	Crankshaft	1
20.	35763F	Needle Bearing Rollers	28
21.	36247	Needle Lever Connecting Rod Pin	1
22.	77	Screw	2
23.	36264D	Needle Lever Thread Eyelet	1
24.	36254B	Link Pin	2
25.	22564	Screw	1
26.	35816	Needle Bar Connection	1
27.	SS7111120TP	Screw	1
28.	36254A	Needle Bar Link	1
29.	77	Screw	1
30.	36215	Needle Lever	1
31.	22596B	Screw	2

From the library of: Diamond Needle Corp

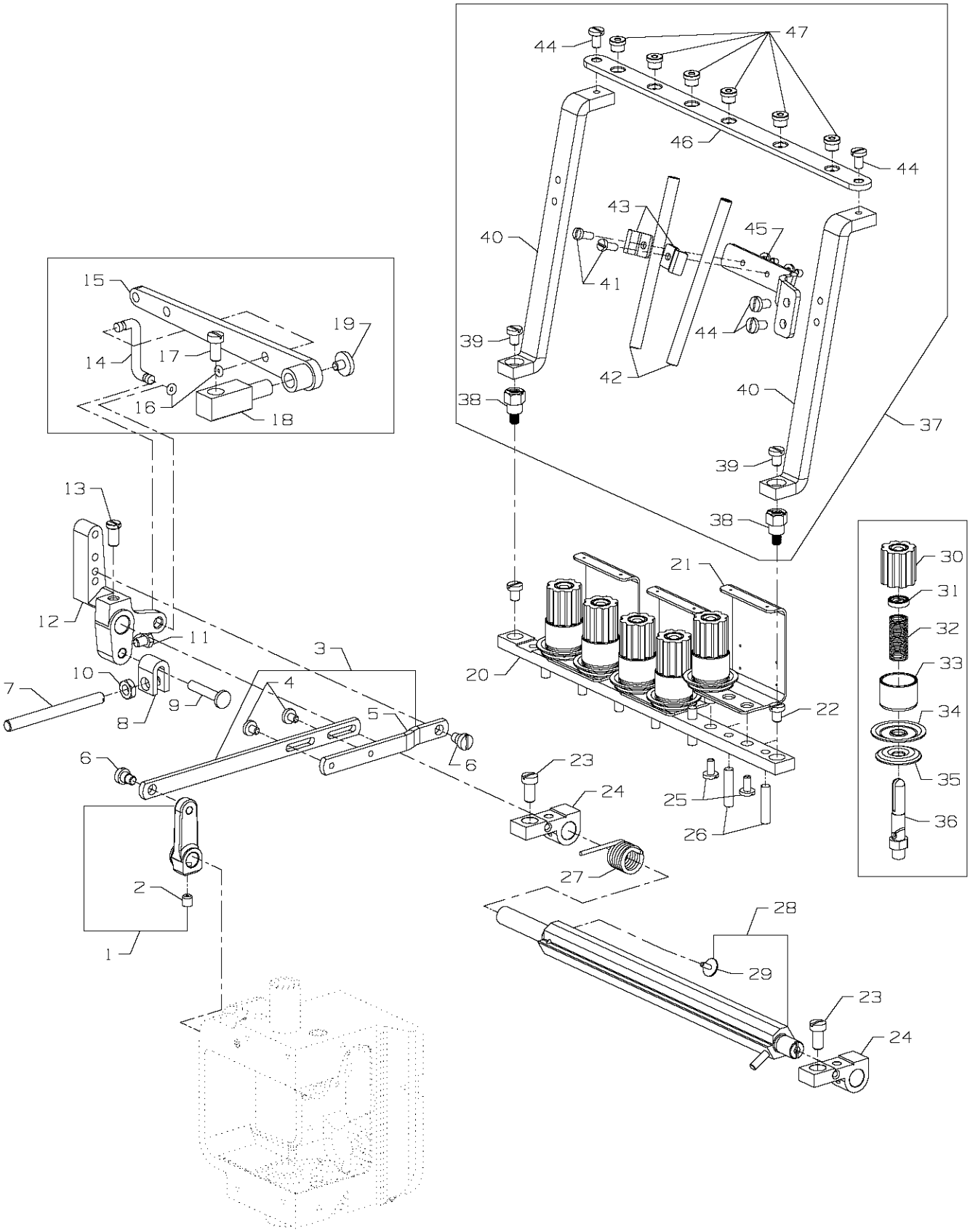

From the library of: Diamond Needle Corp

TENSION PARTS

Ref. No.	Part No.	Description	Amt. Req.
1.	36233	Lift Lever Link Connection	1
2.	22894J	Screw	1
3.	36280V	Lifter Lever Link Assembly	1
4.	22585C	Screw	2
5.	36280U	Lifter Lever Link	1
6.	86	Screw	2
7.	36280A	Presser Foot Lifter Stop Plunger	1
8.	36280C	Stop Plunger Segment	1
9.	36280D	Stop Plunger Segment Pin	1
10.	258A	Nut	1
11.	22519	Screw, for stop plunger segment pin	1
12.	36280W	Presser Bar Lifter Lever	1
13.	22839D	Screw	1
14.	36280T	Lifter Lever Connecting Link	1
15.	36280S	Presser Foot Connection Lifter Lever	1
16.	660-254C	Retaining Ring	2
17.	22517	Screw, for presser foot lifter bearing bracket	1
18.	36280N	Presser Foot Lifter Bearing Bracket	1
19.	255	Screw	1
20.	36298H	Tension Support	1
21.	36298G	Tension Thread Eyelet	3
22.	94	Screw, for tension support	2
23.	22517	Screw, for tension plate bracket	2
24.	36292M	Tension Plate Bracket	2
25.	22585A	Screw, for tension post	6
26.	35792T	Tension Disc Release Pin	7
27.	36292K	Spring, for tension release shaft	1
28.	36292N	Tension Release Shaft	1
29.	22784F	Screw	1
30.	C50092S	Tension Nut	6
31.	39592AK	Tension Spring Ferrule	6
32.	51292F-2	Tension Spring, for cover thread	1
-	51292F-4	Tension Spring, for looper thread	1
-	51292F-5	Tension Spring, for needle thread	4
33.	W56392F	Shield, for tension spring	6
34.	35792	Tension Disc, large	6
35.	109	Tension Disc, small	6
36.	36292Q	Tension Post	6
37.	36266A	Thread Guide Assembly	1
38.	22894BK	Screw Post	1
39.	94	Screw	2
40.	36283R	Mounting Bracket	2
41.	SS7090910TP	Screw	2
42.	36266	Eyelet Tube	2
43.	36283U	Eyelet Tube Holder	2
44.	SS7110840SP	Screw	4
45.	36283T	Bracket, Tube	1
46.	36283S	Eyelet Plate	1
47.	B3319704L00	Eyelet	6

From the library of: Diamond Needle Corp

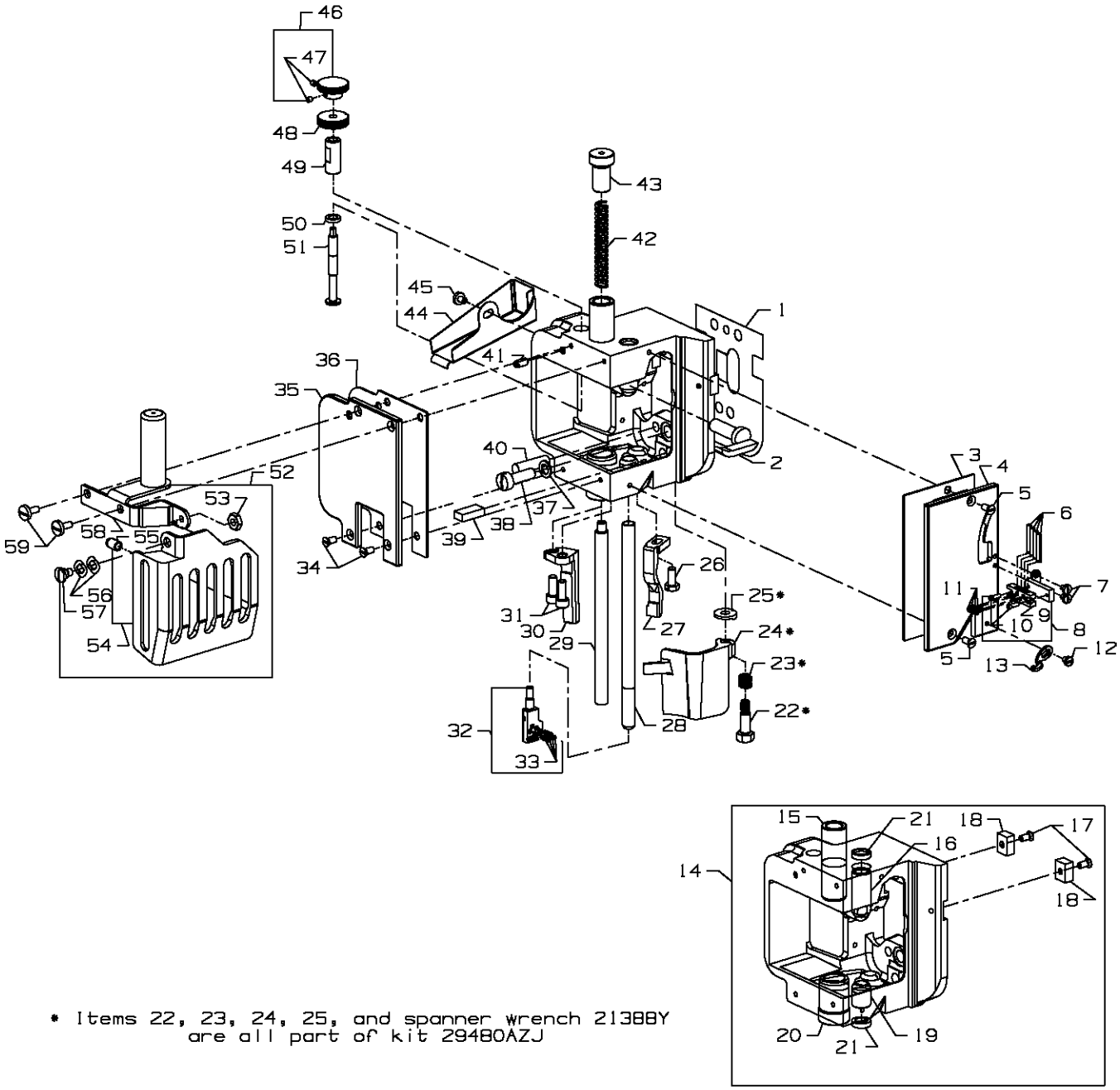

* Items 22, 23, 24, 25, and spanner wrench 21388Y are all part of kit 29480AZJ

From the library of: Diamond Needle Corp

DETACHABLE HEAD, HEAD COVERS, NEEDLE BAR & NEEDLE BAR HEAD

Ref. No.	Part No.	Description	Amt. Req.
1.	36289B	Baffle Plate	1
2.	36280J	Presser Bar Lifter Lever	1
3.	36284P	Gasket, for front head cover	1
4.	36289	Head Cover, front	1
5.	22524	Screw, for front head cover	2
6.	36264B	Needle Thread Strike-off Pin	4
7.	28	Screw, for needle thread take-up	2
8.	36264E	Needle Thread Take-up, complete	4
9.	36264F	Strike-off Pin Holder	1
10.	22738C	Screw, for needle thread take-up	2
11.	28A	Screw, for needle thread take-up	4
12.	28	Screw, for cover thread eyelet	1
13.	51259	Cover Thread Eyelet	1
14.	36229H	Detachable Sewing Head	1
15.	36278A	Presser Bar Bushing	1
16.	36273T	Needle Bar Bushing, upper	1
17.	22524	Screw	2
18.	35767	Sewing Head Key	2
19.	36273S	Needle Bar Bushing, lower	1
20.	36273R	Cover Thread Carrier and Hook Driving Sleeve Bushing	1
21.	660-739	Oil Lip Seal	2
22.	22777B	Screw, for frame chip guard	1
23.	36279L	Spring, for frame chip guard	1
24.	36279N	Frame Chip Guard	1
25.	36279M	Washer, for frame chip guard	1
26.	22881A	Screw, for right presser foot guide	1
27.	36278K	Presser Foot Guide, right	1
-	36278S	Presser Foot Guide, right, for styles 36200UYD52, UYD60	1
28.	36217A	Needle Bar	1
29.	36278	Presser Bar	1

30. thru 59. See Following page

From the library of: Diamond Needle Corp

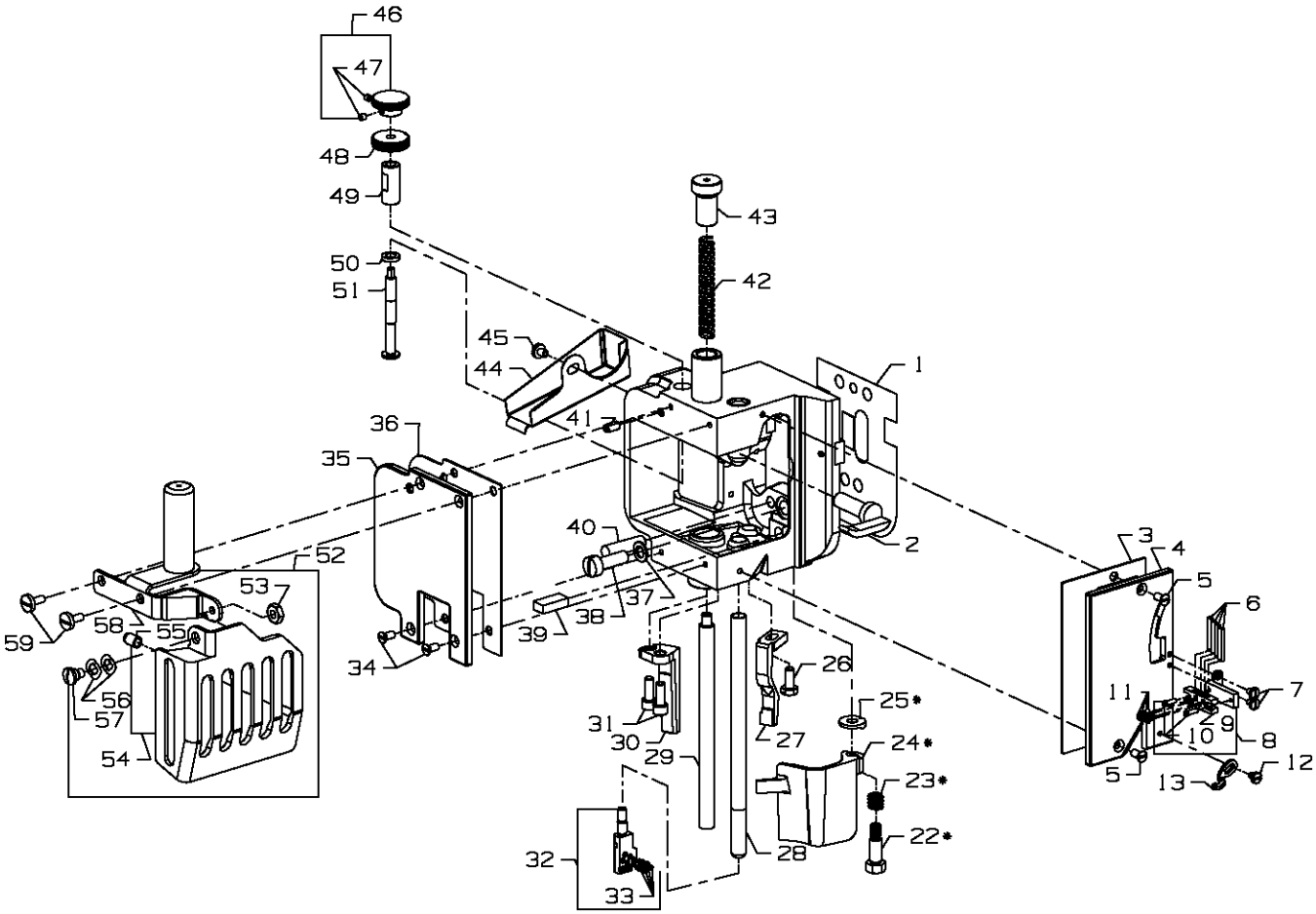

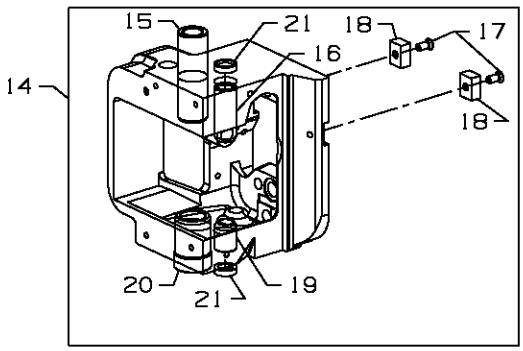

* Items 22, 23, 24, 25, and spanner wrench 21388Y are all part of kit 29480AZJ

From the library of: Diamond Needle Corp

DETACHABLE HEAD, HEAD COVERS, NEEDLE BAR & NEEDLE BAR HEAD

Ref. No.	Part No.	Description	Amt. Req.
1. thru 29. See Preceding page			
30.	36278L	Presser Foot Guide, left	1
-	36278R	Presser Foot Guide, left, for styles 36200UYD52, UYD60	1
31.	22653B-8	Screw, for left presser foot guide	2
32.	36218-52	Needle Head, for 5.2 Gauge	1
-	36218-60	Needle Head, for 6.0 Gauge	1
33.	22738H	Screw, for needles and retainer	5
34.	22524	Screw, for left head cover	2
35.	36289A	Head Cover, left	1
36.	36284N	Gasket, for left head cover	1
37.	6042A	Washer	1
38.	318	Screw, for connecting head to main frame	1
39.	36293J	Felt	1
40.	664F-16	Taper Pin	1
41.	22560A	Screw, for presser bar guide stud	1
42.	36278F	Spring, for presser bar	1
-	36278U	Spring, for presser bar, for styles 36200UYD52, UYD60	1
43.	36278M	Presser Bar Regulating Screw	1
44.	36294E	Oil Guard	1
45.	22585C	Screw	1
46.	660-1131	Knurled Knob	1
47.	28C	Screw	2
48.	660-1130	Knurled Nut	1
49.	36290E	Threaded Sleve	1
50.	36237M	Collar Bumper	1
51.	36278T	Screw Stud	1
52.	29476YP	Sewing Guard Assembly	1
53.	9937	Nut	1
54.	35896D	Sewing Guard	1
55.	666-340A	Bumper Plug	1
56.	WZ0641510KP	Spring Washer	2
57.	22758E	Screw	1
58.	36283P	Mounting Bracket	1
59.	22585B	Screw	2

From the library of: Diamond Needle Corp

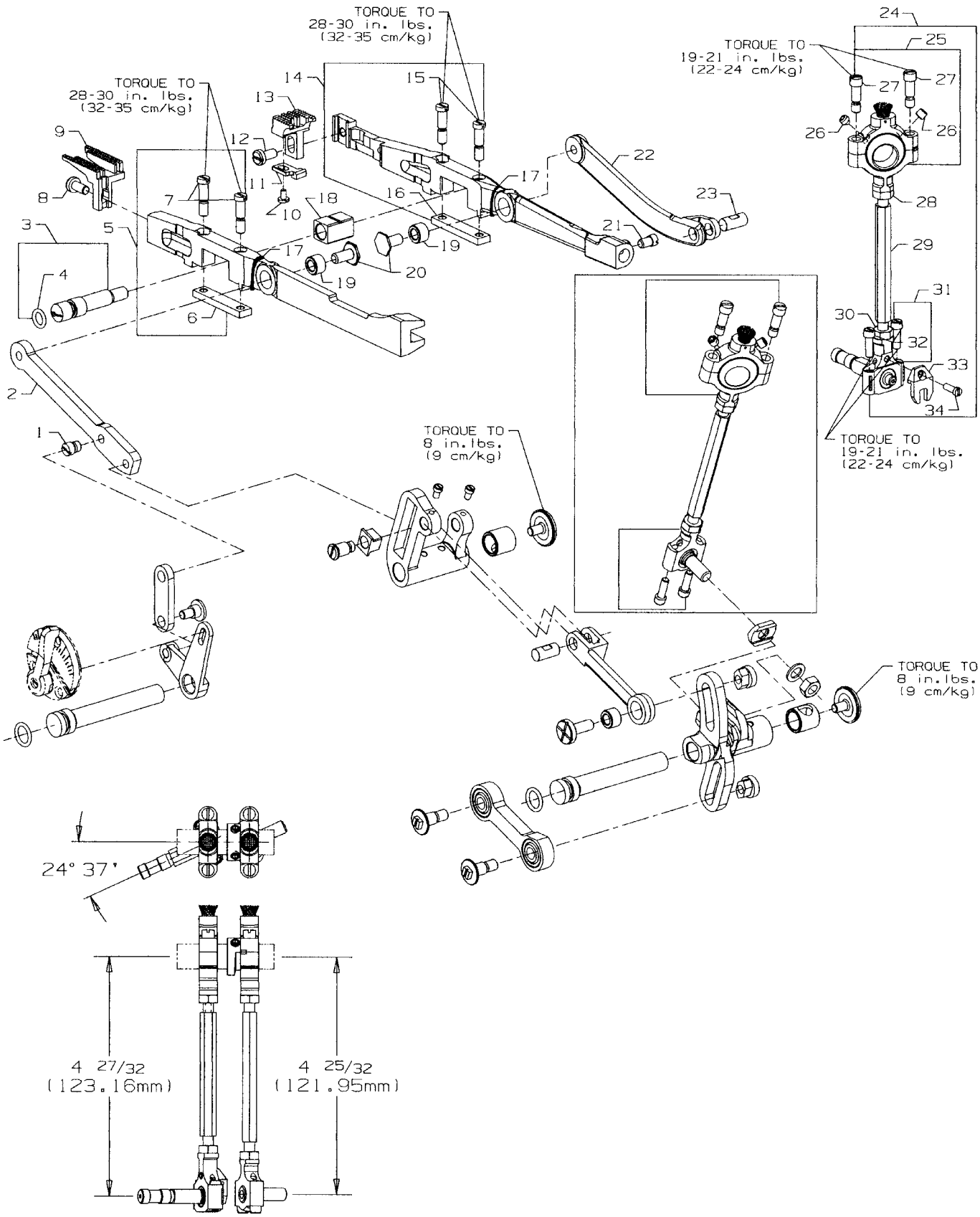

From the library of: Diamond Needle Corp

DIFFERENTIAL & MAIN FEED BARS, FEED DOGS & FEED LIFT ECCENTRIC ASSEMBLY

Ref. No.	Part No.	Description	Amt. Req.
1.	22845M	Screw, for differential feed bar driving link	1
2.	36236F	Differential Feed Bar Driving Link	1
3.	36234M	Feed Bar Eccentric Stud	1
4.	660-220	"O"Ring	1
5.	36234F	Differential Feed Bar	1
6.	36234G	Feed Bar Plate	1
7.	22587H	Screw	2
8.	22528	Screw, for differential feed dog	1
9.	36226A	Differential Feed Dog, marked "FV", 14 teeth per inch, for Styles 36200UAD52, UED52, UED60, UJD60, UJED60, ULD60	1
-	36226B	Differential Feed Dog, marked "PB", 16 teeth per inch	1
-	36226K	Differential Feed Dog, 16 teeth per inch, for styles 36200UYD52, UYD60	1
-	36226H	Differential Feed Dog, marked "PQ", 14 teeth per inch, .050" (1.27mm) step on right side for style 36200UHD52	1
-	36226J	Differential Feed Dog, marked "VU", 16 teeth per inch, .050" (1.27mm) step on right side for style 36200UMD60	1
10.	87U	Screw, for needle guard	1
11.	36225	Needle Guard	1
12.	22528	Screw, for main feed dog	1
13.	36205A	Main Feed Dog, marked "PK", 14 teeth per inch, for Styles 36200UAD52, UED52, UED60, UJD60, UJED60	1
-	36205B	Main Feed Dog, marked "PL", 16 teeth per inch	1
-	36205M	Main Feed Dog, marked "AAK", 14 teeth per inch	1
-	36205N	Main Feed Dog, 16 teeth per inch, for styles 36200UYD52, UYD60	1
-	36205H	Main Feed Dog, marked "PR", 14 teeth per inch, .050" (1.27mm) step on right side for Styles 36200UHD52	1
-	36205J	Main Feed Dog, marked "VV", 16 teeth per inch, .050" (1.27mm) step on right side for Styles 36200UMD60	1
14.	36234E	Main Feed Bar	1
15.	22578H	Screw	2
16.	36234G	Feed Bar Plate	1
17.	CQ200000000	Yarn	2
18.	36234C	Feed Bar Slide Block	1
19.	36236H	Bushing	2
20.	36236G	Driving Link Stud	2
21.	33174B	Screw	1
22.	36236E	Main Feed Bar Drive Link	1
23.	62238A	Link Pin	1
24.	29478CS	Feed Lift Eccentric Assembly	1
25.	29103T	Feed Lift Eccentric Assembly Ball Joint	1
26.	22894W	Set Screw	2
27.	22587E	Screw	2
28.	269	Nut, left thread	1
29.	36244	Connecting Rod	1
30.	18	Nut, right thread	1
31.	36244A	Ball Joint, complete	1
32.	22729C	Screw	2
33.	41255B	Ball Fork	1
34.	22747	Screw, for ball fork	1

From the library of: Diamond Needle Corp

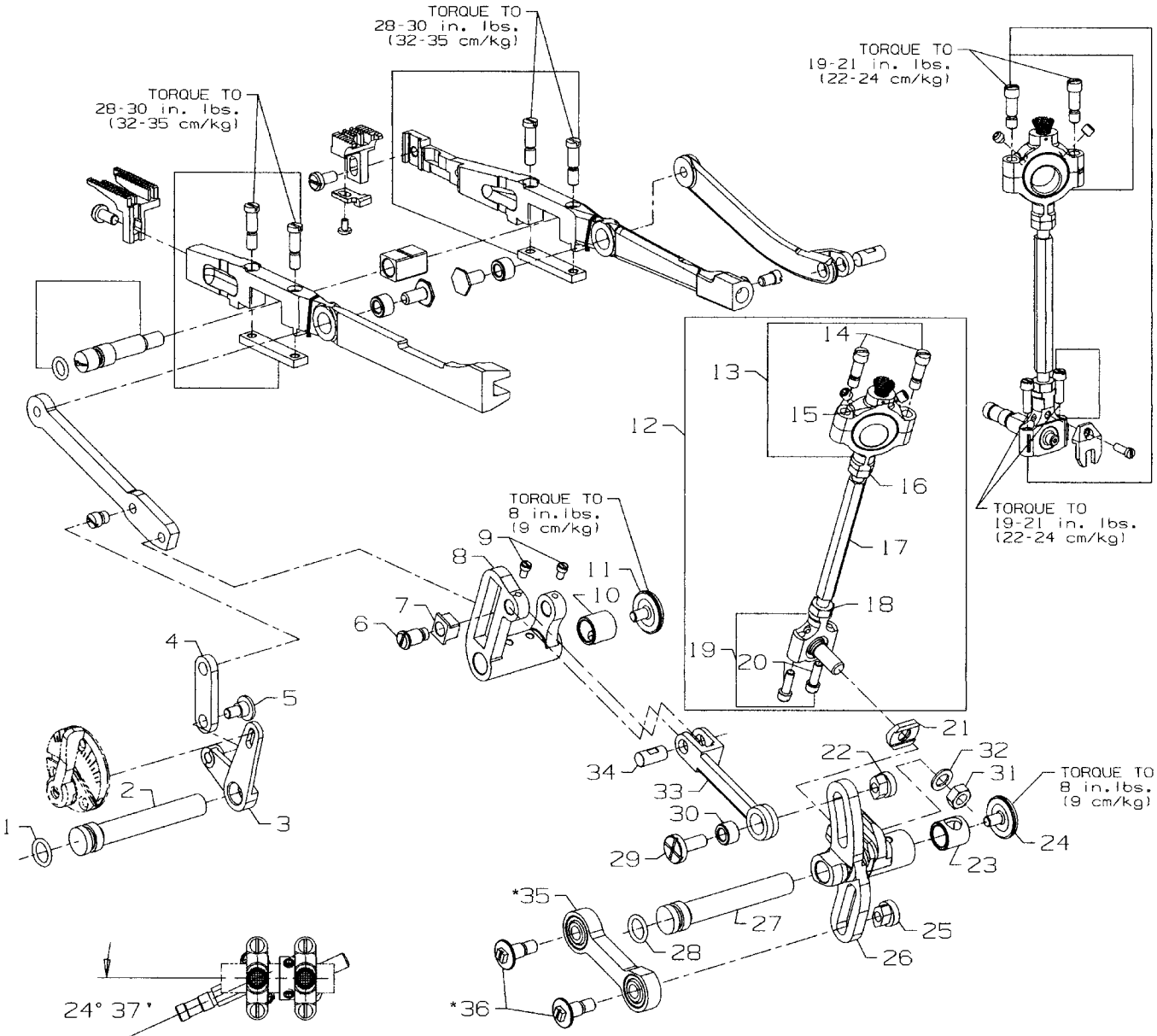

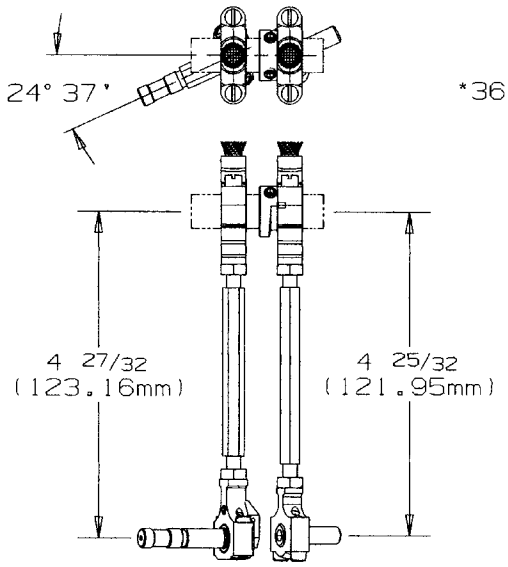

*** Items 35 and 36 may also be purchased as 29478FI**

From the library of: Diamond Needle Corp

FEED DRIVE ASSEMBLY, FEED ROCKER & LOOPER AVOID PARTS

Ref. No.	Part No.	Description	Amt. Req.
1.	660-207	Oil Seal Ring	1
2.	36236A	Feed Rocker Shaft	1
3.	36237	Differential Feed Adjusting Lever	1
4.	36237A	Differential Feed Adjusting Link	1
5.	22504C	Screw	1
6.	36236J	Differential Driving Link Stud	1
7.	36236K	Differential Feed Driving Link Slide Block	1
8.	36236	Feed Rocker	1
9.	77	Screw	2
10.	36236B	Bushing	1
11.	22733G	Screw	1
12.	29478CT	Feed Drive Assembly	1
13.	29101J	Feed Drive Eccentric Assembly	1
14.	22587E	Screw	2
15.	22894W	Set Screw	2
16.	269	Nut, left thread	1
17.	43246	Connecting Rod	1
18.	18	Nut, right thread	1
19.	35846	Ball Joint	1
20.	22729C	Screw	2
21.	35846B	Washer	1
22.	35866	Nut	1
23.	36236B	Bushing	1
24.	22733G	Screw	1
25.	35766B	Nut	1
26.	35842J	Feed Drive and Looper Avoid Drive Lever	1
27.	36236A	Feed Drive Shaft	1
28.	660-207	Oil Seal Ring	1
29.	35836C	Screw, for feed rocker driving link	1
30.	36236H	Bushing	1
31.	258	Nut	1
32.	6042A	Washer	1
33.	36236C	Feed Rocker Driving Link	1
34.	62238A	Link Pin	1
35.	35851S	Connecting Rod	1
36.	35851P	Screw	2

From the library of: Diamond Needle Corp

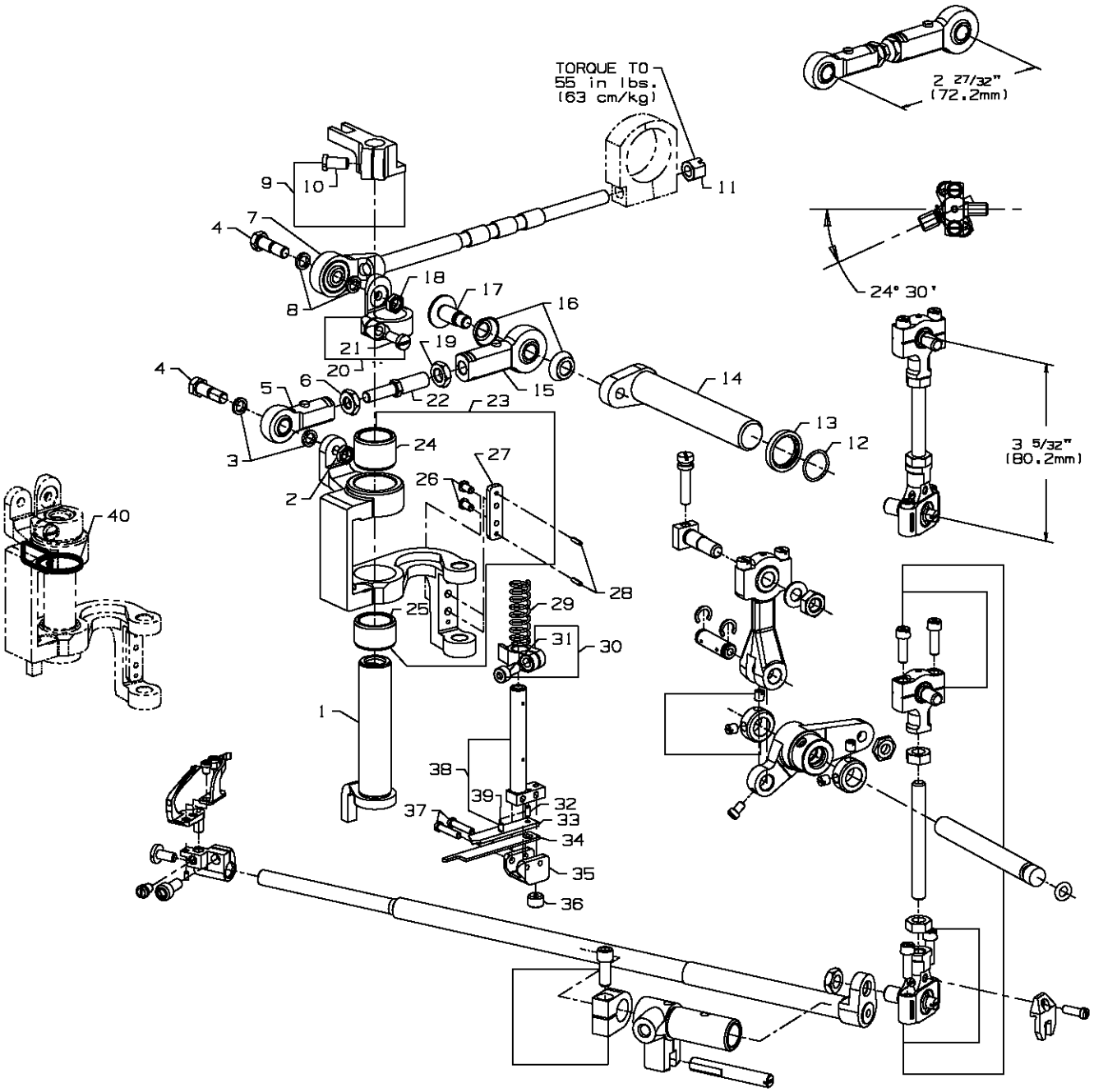

From the library of: Diamond Needle Corp

KNIFE DRIVING PARTS

Ref. No.	Part No.	Description	Amt. Req.
1.	36251B	Cover Thread Carrier and Hook Driving Sleeve	1
2.	12934A	Nut	1
3.	51235G	Washer	2
4.	36245K	Screw	2
*5.	36245H	Rod End Bearing	1
*6.	36245D	Nut, right thread	1
7.	36251AA	Cover Thread Carrier and Hook Driving Connection Rod Ball Joint	1
8.	36275A	Washer	2
9.	36278J	Presser Bar Guide	1
10.	22569G	Screw	1
11.	52841H	Nut	1
12.	660-1019	"O"Ring	1
13.	36275	Torlon Washer	1
14.	36261	Knife Drive Lever	1
*15.	36245G	Rod End Bearing	1
16.	36275B	Washer, seal	2
17.	36245J	Screw	1
18.	12934A	Nut	1
*19.	36245E	Nut, left thread	1
20.	36251C	Sleeve Driving Lever, for styles 36200UAD52, UED52, UHD52, UYD52	1
21.	36251V	Sleeve Driving Lever, for styles 36200UED60, UJD60, UJED60, UMD60 UYD60	1
-	22585	Screw	1
*22.	36245F	Stud, Rod End Bearing	1
23.	36273U	Knife Driving Bracket	1
24.	36273Q	Bushing	1
25.	36273P	Bushing	1
26.	605A	Screw	2
27.	36273J	Knife Holder Guide Plate	1
28.	660-219D	Roll Pin	2
29.	36273C	Knife Holder Spring	1
30.	36273K	Knife Holder Guide Collar	1
31.	22729M	Screw	1
32.	22799N	Screw	1
33.	36273D	Knife Support	1
34.	36270B	Knife, upper	1
35.	36273G	Knife Holder	1
36.	22894X	Screw	1
37.	22767A	Screw	2
38.	36273A	Knife Holder Shank	1
39.	1096B	Screw	1
40.	CQ200000000	Oil Wick	1

* May also be purchased assembled and set to length as 29478FJ.

From the library of: Diamond Needle Corp

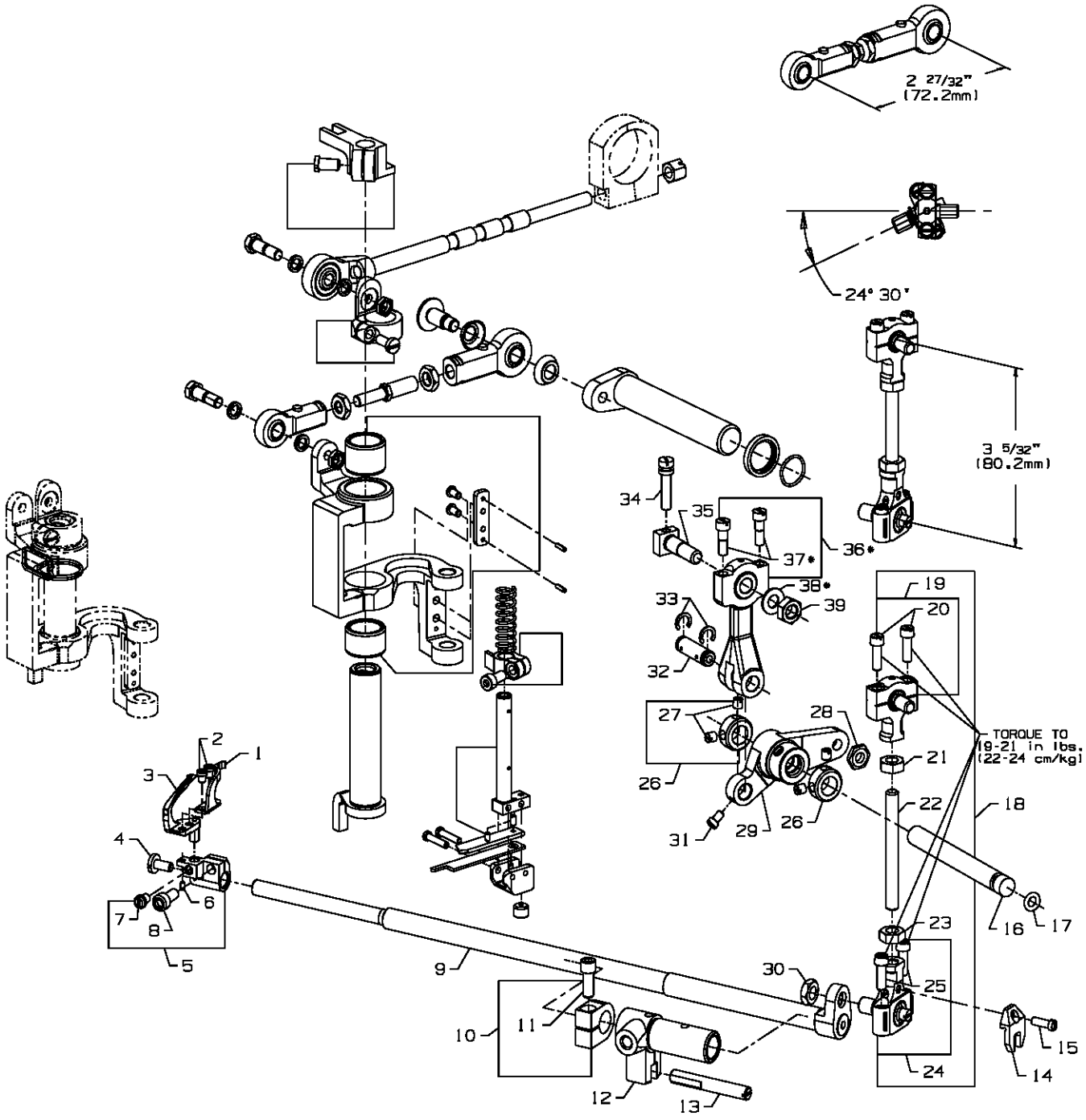

* Items 36, 37, and 38 are part of Looper Drive connection kit 29476FG

From the library of: Diamond Needle Corp

LOOPER ROCKER SHAFT & LOOPER ROCKER DRIVE PARTS

Ref. No.	Part No.	Description	Amt. Req.
1.	36210	Looper Mounted Needle Guard, marked "FZ"	1
2.	604	Screw, for needle guard	2
3.	36208A	Looper	1
4.	22585A	Screw	1
5.	36248	Looper Holder	1
6.	1096B	Looper Adjusting Screw	1
7.	22564D	Screw	1
8.	22652A-6	Screw	1
9.	36249	Looper Rocker Shaft	1
10.	35751G	Looper Shaft Collar	1
11.	22572B	Screw	1
12.	36249B	Looper Shaft Sleeve	1
13.	36278C	Guide Stud	1
14.	41255B	Ball Fork	1
15.	22747	Screw	1
16.	36253B	Looper Drive Lever Shaft	1
17.	660-221	Oil Seal Ring	1
18.	29478CU	Looper Drive Connecting Rod Assembly	1
19.	35851L	Ball Joint, upper	1
20.	22729C	Screw	2
21.	269	Nut, left thread	1
22.	4761	Connecting Rod	1
23.	18	Nut, right thread	1
24.	39145A	Ball Joint, lower	1
25.	22729C	Screw	2
26.	12865	Collar	2
27.	88	Screw	2
28.	15037A	Nut	1
29.	36253A	Looper Drive Lever	1
30.	258A	Nut	1
31.	77	Screw	1
32.	52336	Link Pin	1
33.	660-215	Retaining Ring	2
34.	22795B	Screw	1
35.	36253G	Looper Drive Crank Stud	1
36.	36245B	Looper Drive Connecting Rod and Ferrule Sub-Assembly	1
37.	97A	Screw	1
38.	53636C	Washer	1
39.	269	Nut, left thread	1

From the library of: Diamond Needle Corp

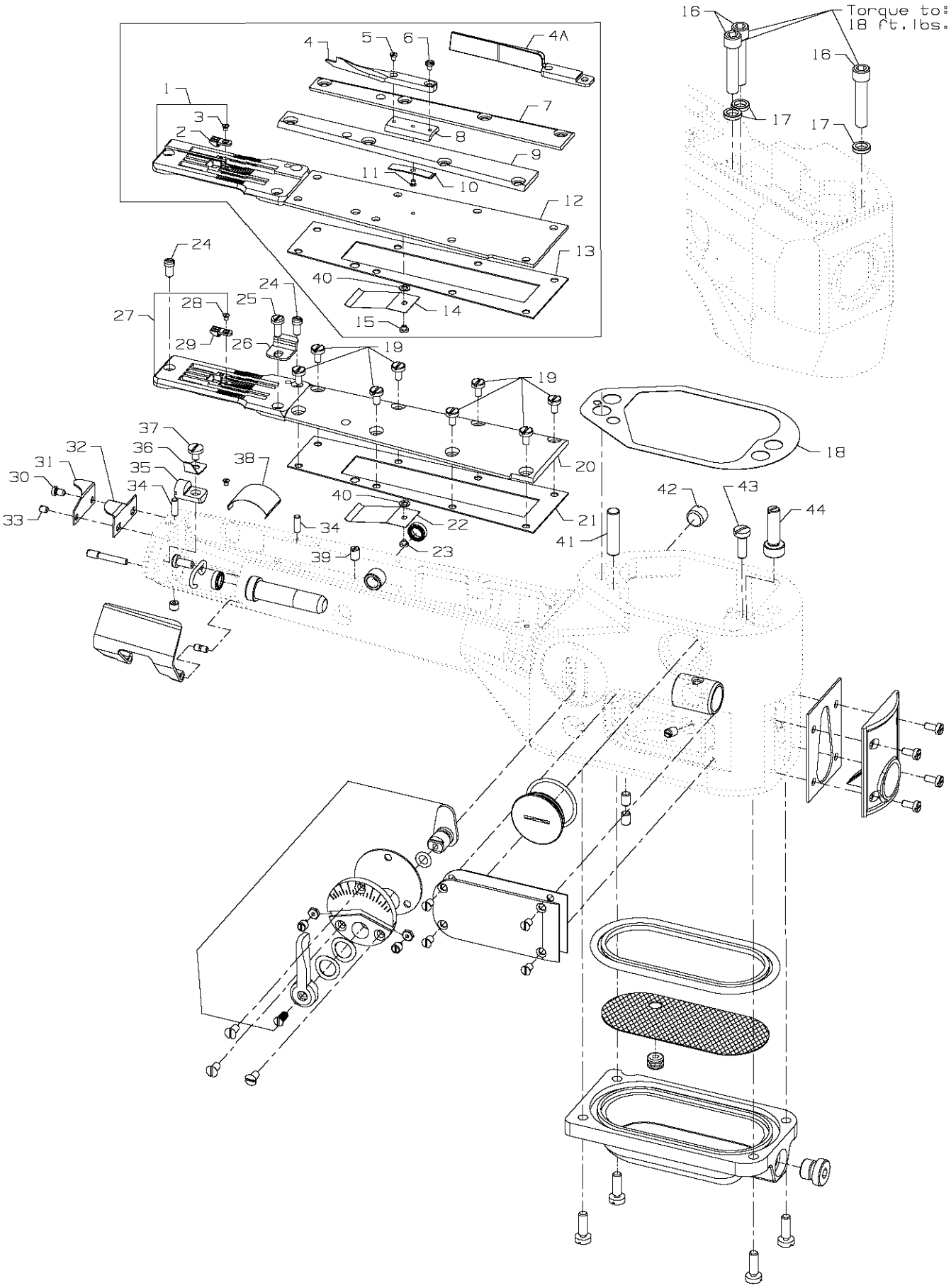

From the library of: Diamond Needle Corp

Ref. No.	Part No.	Description	Amt. Req.
1.	36224H	Throat Plate, for Style 36200UHD52	1
-	36224K	Throat Plate, for Style 36200UMD60	1
2.	36240	Stitch Tongue, marked "D", for Throat Plates 36224H	1
-	36240J	Stitch Tongue, marked "AC", for Throat Plates 36224K	1
3.	22716A	Screw, for stitch tongue	1
4.	23420DB	Lap Former, for styles 36200UED52, UED60, UHD52, UJED60, UMD60	1
-	23420CZ	Lap Former, for style 36200ULD60	1
4A.	23420DH	Lap Former, for styles 36200UYD52, UYD60	1
5.	22738B	Screw, for lap former	1
6.	73A	Screw, for lap former	1
7.	36283J	Gib, right, for styles 36200UED52, UED60, UHD52, UJED60, ULD60, UMD60, UYD52, UYD60	1
8.	23423X	Lap Former Slide Block, for 36200UED52, UED60, UHD52, UJED60, ULD60, UMD60, UYD52, UYD60	1
9.	36283H	Gib, left, for styles 36200UED52, UED60, UHD52, UJED60, ULD60, UMD60, UYD52, UYD60	1
10.	23424Z	Spring, for lap former slide block	1
11.	22716A	Screw, for lap former slide block spring	1
12.	36283G	Cylinder Cover, for styles 36200UED52, UED60, ULD60, UYD52, UYD60	1
13.	36283F	Gasket, for cylinder cover, all styles	1
14.	36284E	Upper Lint Shield, all styles	1
15.	22798	Screw, upper lint shield	1
16.	22653E-24	Screw, for joining cylinder to main frame	3
17.	35876U	Washer	3
18.	36284	Gasket	1
19.	98A	Screw, for cylinder cover	8
20.	36283E	Cylinder Cover	1
21.	36283F	Gasket, for cylinder cover	1
22.	36284E	Upper Lint Shield	1
23.	22798	Screw, upper lint shield	1
24.	22562A	Screw, for throat plate	3
25.	22849	Screw, for edge guide	1
26.	36203	Edge Guide, for Styles 36200UAD52, UED52, UED60, UJD60, UJED60, ULD60	1
27.	C36224A	Throat Plate, for Style 36200UAD52, UED52	1
-	C36224J	Throat Plate, for Style 36200UED60, UJD60, UJED60	1
-	C36224N	Throat Plate, for Style 36200ULD60	1
-	C36224P	Throat Plate, for Style 36200UYD52	1
-	C36224Q	Throat Plate, for Style 36200UYD60	1
28.	22716A	Screw, for stitch tongue	1
29.	36240	Stitch Tongue, marked "D", for Throat Plates C36224A, C36224P	1
-	36240J	Stitch Tongue, marked "AC", for Throat Plates C36224J, C36224Q	1
30.	22KH	Screw, for chain cutting knife	1
31.	36296B	Guard, for chain cutting knife	1
32.	36296A	Chain Cutting Knife	1
33.	22801	Screw, for chain cutting knife	1
34.	36251K	Dowel Pin	2
35.	36283C	Cylinder Hinged Spring Support Stud	1
36.	36283B	Spring	1
37.	22585C	Screw, spring	1
38.	35884K	Lower Lint Shield	1
39.	531	Screw	1
40.	40-407	Washer	1
41.	667D-16	Dowel Pin	1
42.	22571A	Plug Screw	1
43.	22596	Screw, for feed bar eccentric stud	1
44.	36229A-1	Cylinder Alignment Eccentric Pin	1

From the library of: Diamond Needle Corp

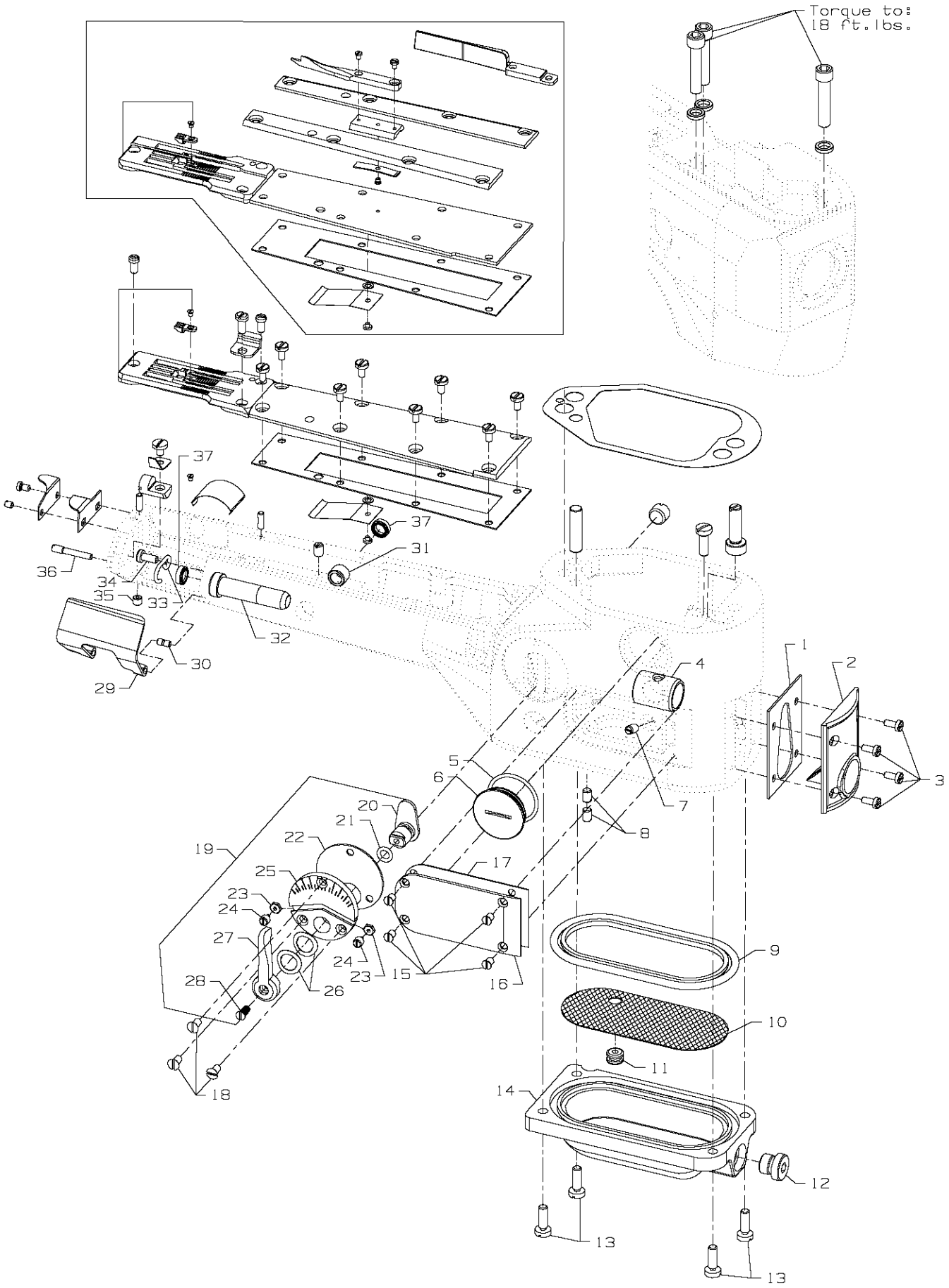

From the library of: Diamond Needle Corp

CYLINDER BUSHINGS, DIFFERENTIAL FEED CONTROL ASSEMBLY & MISCELLANEOUS CYLINDER COVERS

Ref. No.	Part No.	Description	Amt. Req.
1.	36284R	Gasket, for front cylinder cover and oil gauge	1
2.	36284C	Cylinder Cover and Oil Gauge, front	1
3.	J87J	Screw, for front cylinder cover and oil gauge	4
4.	36249A	Bushing, for looper shaft, front	1
5.	660-1115	"O" Ring	1
6.	22539AL	Plug Screw	1
7.	22560A	Screw, for guide stud	1
8.	531	Screw	2
9.	36284F	Gasket, for bottom cover	1
10.	36293G	Screen, for bottom cover	1
11.	661-150	Rubber "O" Ring, for screen	1
12.	999-196	Oil Drain Plug Screw	1
13.	22596	Screw, for bottom cover	4
14.	36282	Bottom Cover	1
15.	22766	Screw, for cylinder side cover	4
16.	36286	Cylinder Side Cover	1
17.	36284Q	Gasket, for cylinder side cover	1
18.	87A	Screw, for differential feed control assembly	3
19.	29478CZ	Differential Feed Control Assembly, complete	1
20.	36237E	Adjusting Lever	1
21.	660-220	Oil Seal Ring	1
22.	36238F	Gasket	1
23.	60078Z	Nut	2
24.	36237H	Stop Screw	2
25.	36238	Adjusting Plate	1
26.	36237J	Spring Washer	2
27.	36237K	Operating Lever	1
28.	538	Screw	1
29.	36283K	Cylinder Hinged Cover	1
30.	35883G	Pin	1
31.	36237L	Bushing, for feed bar eccentric stud	1
32.	35850F	Bushing, for looper shaft, rear	1
33.	36256B	Looper Thread Guide Wire	1
34.	22849	Screw, for looper thread guide wire	1
35.	22894W	Screw, for cylinder hinged spring support stud	1
36.	22791E	Screw Pin	1
37.	660-1117	Oil Seal	2

From the library of: Diamond Needle Corp

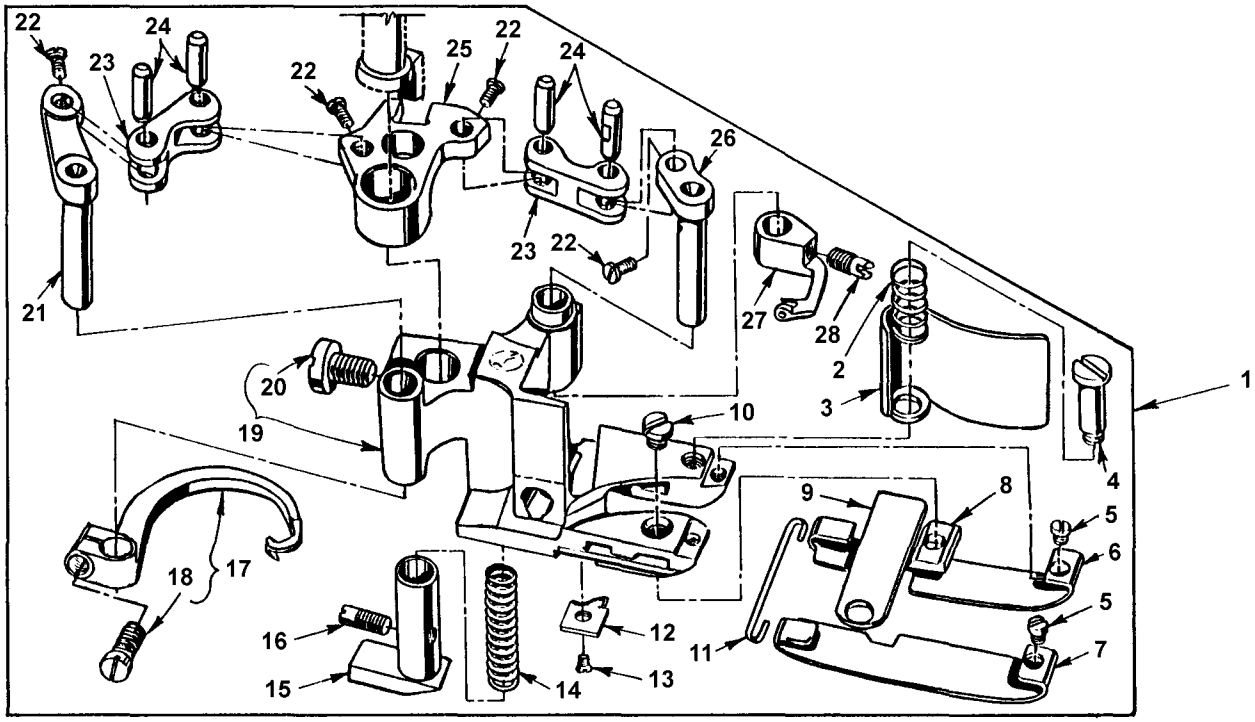

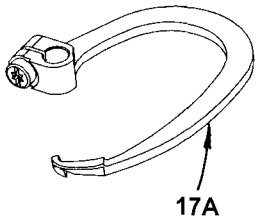

From the library of: Diamond Needle Corp

PRESSER FOOT FOR 36200UED52, UED60, UHD52, UJED60, UMD60

Ref. No.	Part No.	Description	Amt. Req.
1.	36220E	Presser Foot, complete, for Style 36200UED52	1
-	36220H	Presser Foot, complete, for Style 36200UHD52	1
-	36220M	Presser Foot, complete, for Style 36200UMD60	1
	36220V	Presser Foot, complete, for Style 36200ULD60	1
-	36220W	Presser Foot, complete, for Style 36200UED60, UJED60	1
2.	36279D	Spring, for chip guard	1
3.	36279C	Chip Guard	1
4.	22731	Screw, for chip guard	1
5.	22738G	Screw, for presser foot shoe	2
#6.	36232AW	Presser Foot Shoe, right, 36220 E, 36220 W, 36220 V presser foot	1
-	36232AM	Presser Foot Shoe, right, 36220H presser foot	1
-	36232AP	Presser Foot Shoe, right, 36220M presser foot	1
#7.	36231AW	Presser Foot Shoe, left, 36220E, 36220 W, 36220 V presser foot	1
-	36231AM	Presser Foot Shoe, left, 36220H presser foot	1
-	36231AP	Presser Foot Shoe, left, 36220M presser foot	1
*8.	36250B	Stationary Knife Clamp, .213" (5.41mm) ID Mark"A"	1
*-	36250G	Stationary Knife Clamp, .222" (5.64mm) ID Mark "B"	1
*-	36250J	Stationary Knife Clamp, .226" (5.74mm) ID Mark "J"	1
9.	36250	Stationary Knife	1
10.	150	Screw, for stationary knife clamp	1
11.	36230D	Shoe Holding Wire	1
12.	36230R	Cloth Guide Plate	1
13.	22716A	Screw, for cloth guide plate	1
14.	36230C	Spring, for yielding section	1
15.	36230P	Yielding Section	1
16.	22565A	Screw, for yielding section	1
17.	36251F	Cover Thread Hook, for 36220E, 36220H presser foot	1
-	36251FA	Cover Thread Hook, for 36220M, 36220W presser foot	1
17A	36251FE	Cover Thread Hook, for 36220V presser foot	
18.	22562A	Screw, for cover thread hook	1
19.	36230M	Presser Foot Base, for 36220 E, 36220 W, 36220 V presser foot	1
-	36230S	Presser Foot Base, for 36220 H, 36220M presser foot	1
20.	94	Screw, for presser foot base	1
21.	36251H	Cover Thread Hook Driving Lever and Shaft	1
22.	22738P	Screw	4
23.	36251J	Link, for ref. no. 21, 25 and 26	2
24.	36251K	Link Pin	4
25.	36251L	Cover Thread Carrier and Hook Driving Segment	1
26.	36251G	Cover Thread Carrier Driving Lever and Shaft	1
27.	36251E	Cover Thread Carrier, for 36220E, 36220H presser foot	1
-	36251W	Cover Thread Carrier, for 36220M, 36220 W, 36220 V presser foot	1
28.	22565A	Screw, for cover thread carrier	1

* When replacing the stationary knife clamp, order the clamp that has the same I. D. mark as the one being replaced.

#See page 54-55 for other presser foot shoes available.

From the library of: Diamond Needle Corp

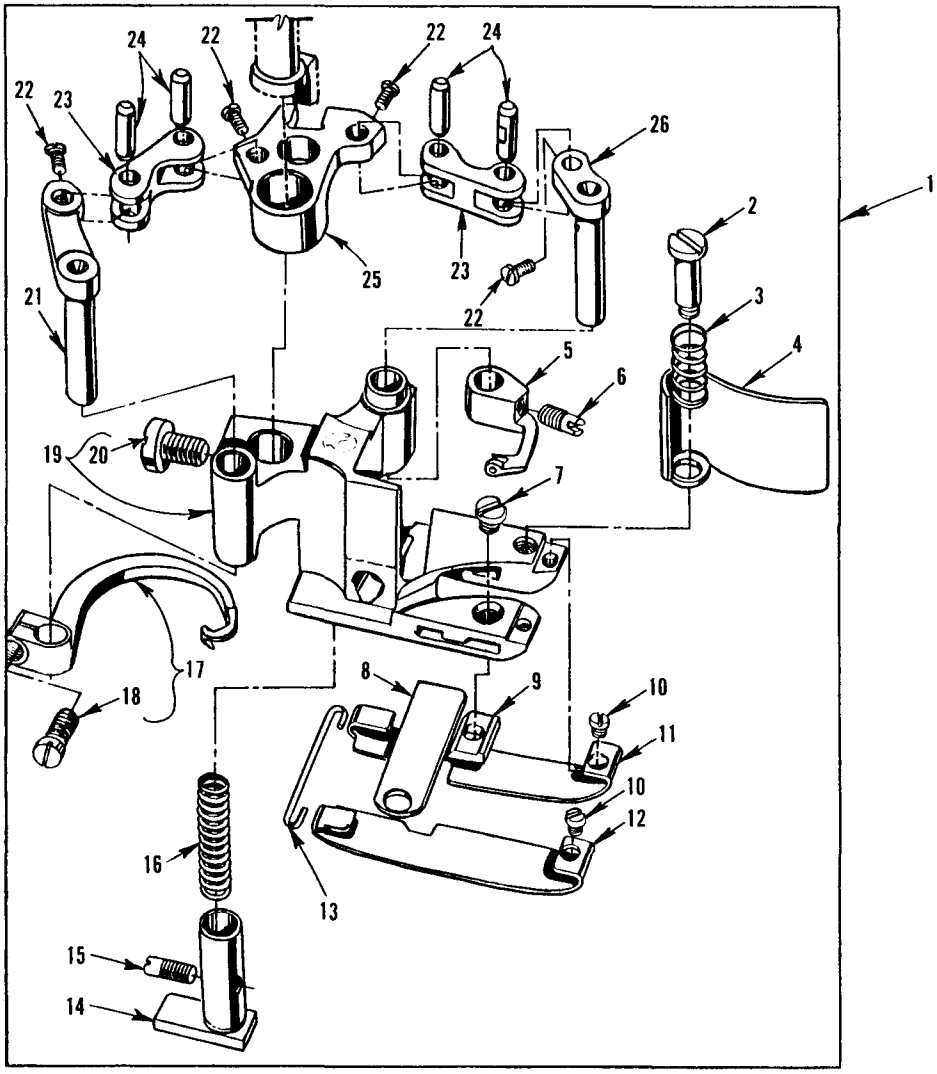

From the library of: Diamond Needle Corp

PRESSER FEET 36200UAD52, UJD60

Ref. No.	Part No.	Description	Amt. Req.
1.	36220A	Presser Foot, complete, for Styles 36200UAD52	1
-	36220K	Presser Foot, complete, for Styles 36200UJD60	1
2.	22731	Screw, for chip guard	1
3.	36279D	Spring, for chip guard	1
4.	36279C	Chip Guard	1
5.	36251E	Cover Thread Carrier, for 36220A presser foot	1
-	36251W	Cover Thread Carrier, for 36220K presser foot	1
6.	22565A	Screw, cover thread carrier	1
7.	150	Screw, for stationary knife clamp	1
8.	36250	Stationary Knife	1
*9.	36250B	Stationary Knife Clamp, .213" (5.41mm) ID Mark"A"	1
*-	36250G	Stationary Knife Clamp, .222" (5.64mm) ID Mark "B"	1
*-	36250J	Stationary Knife Clamp, .226" (5.74mm) ID Mark "J"	1
10.	22738G	Screw, for presser foot shoe	2
#11.	36232AY	Presser Foot Shoe, right, for 36220A, K presser foot	1
#12.	36231AY	Presser Foot Shoe, left, for 36220A, K presser foot	1
13.	36230D	Shoe Holding Wire	1
14.	36230J	Yielding Section, for 36220A, K presser foot	1
15.	22565A	Screw, for yielding section	1
16.	36230C	Spring, for yielding section	1
17.	36251F	Cover Thread Hook, for 36220A presser foot	1
-	36251FA	Cover Thread Hook, for 36220K presser foot	1
18.	22562A	Screw, for cross thread hook	1
19.	36230U	Presser Foot Base, for 36220 A, K, L presser foot	1
20.	94	Screw, for presser foot base	1
21.	36251H	Cover Thread Hook Driving Lever and Shaft	1
22.	22738P	Screw	4
23.	36251J	Link, for ref. no. 21, 25 and 26	2
24.	36251K	Link Pin	4
25.	36251L	Cover Thread Carrier and Hook Driving Segment	1
26.	36251G	Cover Thread Carrier Driving Lever and Shaft	1

* When replacing the stationary knife clamp, order the clamp that has the same I. D. mark as the one being replaced.

#See page 54-55 for other presser foot shoes available.

From the library of: Diamond Needle Corp

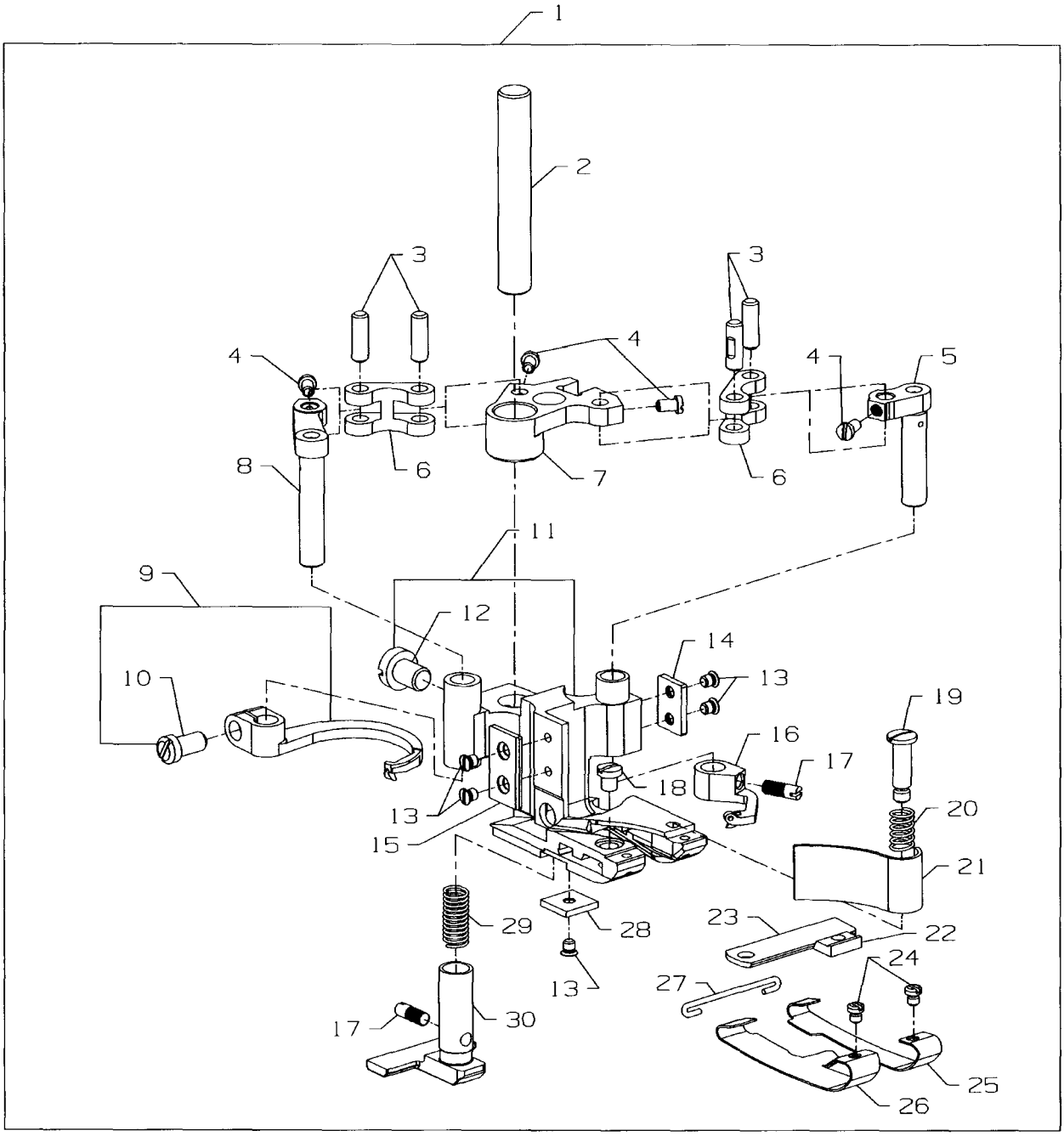

From the library of: Diamond Needle Corp

PRESSER FOOT 36200UYD52, 60

Ref. No.	Part No.	Description	Amt. Req.
1.	36220X	Presser Foot, complete, for Style 36200UYD52	1
-	36220Y	Presser Foot, complete, for Style 36200UYD60	1
2.	22-331	Pin	1
3.	36251K	Link Pin, for 5, 6 and 8	4
4.	22738P	Screw	4
5.	36251G	Cover Thread Lever	1
6.	36251J	Driving Lever Link	2
7.	36251L	Driving Segment	1
8.	36251H	Cover Thread Hook Lever	1
9.	36251F	Cover Thread Hook, For 36220X presser foot	1
-	36251FA	Cover Thread Hook, For 36220Y presser foot	1
10.	22562A	Screw	1
11.	36230AN	Presser Foot	1
12.	94	Screw	1
13.	22716A	Screw	5
14.	36230AP	Plate, Right	1
15.	36230AH	Plate, Left	1
16.	36251E	Cover Thread Carrier, For 36220X presser foot	1
-	36251W	Cover Thread Carrier, For 36220Y presser foot	1
17.	22565A	Screw	2
18.	150	Screw	1
19.	22731	Screw	1
20.	36279D	Spring, Chip Guard	1
21.	36279C	Chip Guard	1
22.	36250K	Stationary Knife Clamp, .213"(5.14mm) ID Mark"D"	1
-	36250M	Stationary Knife Clamp, .222"(5.64mm) ID Mark"F"	1
-	36250L	Stationary Knife Clamp, .226"(5.74mm) ID Mark"E"	1
23.	36250	Stationary Knife	1
24.	22738G	Screw	1
#25.	36232BD	Presser Foot Shoe, Right	1
#26.	36231BD	Presser Foot Shoe, Left	1
27.	36230D	Shoe Holding Wire	1
28.	36230AQ	Cloth Guide Block	1
29.	36230AJ	Spring, Yielding Section	1
30.	36230AL	Yielding Section	1

* When replacing the stationary knife clamp, order the clamp that has the same I. D. mark as the one being replaced.

#See page 54-55 for other presser foot shoes available.

From the library of: Diamond Needle Corp

PRESSER FOOT SHOE CHART

STANDARD PRESSER FEET	
1	36220
2	36220A
3	36220B
4	36220E
5	36220H
6	36220J
7	36220K
8	36220L
9	36220M
10	36220W
11	36220X
12	36220Y

SELECTING THE PROPER PRESSER FOOT SHOES

THICKNESS OF SHOES

.014 THICK — Used when sewing lightweight material, when light presser foot pressure is essential.

.020 THICK — Used when sewing medium to heavyweight material, requiring more foot pressure.

WIDTH OF SHOES

NARROW SHOES — Used for medium to heavier material.

WIDE SHOES — Used for light weight material.

LENGTH OF SHOE TOE

SHORT TOE — Adapts easily to a variety of operations and material.

EXTENDED TOE — Gives more feeding surface to the front of the presser foot, and may allow the operator to start the seam without raising the presser foot.

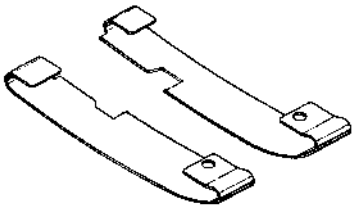

LONG SHOE

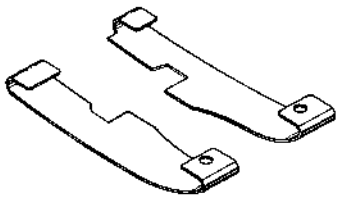

SHORT SHOE

PRESSER FOOT SHOE	RIGHT	LEFT	MATERIAL THICKNESS	
			.014	.020
36231AD		0		0
36232AD	0			0
36231AE		0		0
36232AE	0			0
36231AF		0		0
36232AF	0			0
36231AG		0		0
36232AG	0			0
36231AH		0		0
36232AH	0			0
36231AJ		0		0
36232AJ	0			0
36231AK		0		0
36232AK	0			0
36231AL		0		0
36232AL	0			0
36231AM		0		0
36232AM	0			0
36231AP		0		0
36232AP	0			0
36231AW		0	0	
36232AW	0		0	
36231AY		0	0	
36232AY	0		0	
36231AZ		0	0	
36232AZ	0		0	
36231BA		0	0	
36232BA	0		0	
36231BB		0	0	
36232BB				
36232BD		0	0	
36232BD	0		0	

From the library of: Diamond Needle Corp

PRESSER FOOT SHOE CHART

SHORT TOE	EXTENDED TOE	SHOE WIDTH	STANDARD ON PRESSER FOOT	CAN ALSO BE USED ON	FURNISHED ON MACHINE STYLE	SAME AS
	0	3/8	NONE	1*2*3*6*7*8	NONE	
	0	11/32				
0		13/32 (10.3mm)	NONE	2*3*7*8	NONE	36231BB
0		3/8 (8.8mm)				36232BB
	0	13/32 (10.3mm)	NONE	1*2*3*6*7*8	NONE	
	0	3/8 (9.5mm)				
0		13/32 (10.3mm)	NONE	1*2*3*6*7*8	NONE	
0		3/8 (9.5mm)				
0		11/32 (8.7mm)	NONE	1*3*6*8	NONE	36231AY
0		11/32 (8.7mm)				36232AY
	0	11/32 (8.7mm)	NONE	1*2*3*6*7*8	NONE	36231AZ
	0	11/32 (8.7mm)				36232AZ
	0	1/2 (12.7mm)	NONE	5*9	NONE	36231AW
	0	9/32 (7.1mm)				36232AW
0		13/32 (10.3mm)	NONE	1*2*6*7*8	NONE	36231BA
0		3/8 (9.5mm)				36232BA
	0	1/2 (12.7mm)	36220H	4*9*10	36200UH52, 36200UHD52	
	0	5/16 (7.9mm)				
	0	1/2 (12.7mm)	36220M	4*5*10	36200UM60	
	0	9/32 (7.1mm)				
	0	1/2 (12.7mm)	36220E 36220W	4*5*9	36200UAE52, 36200UE52, 36200UED52, 36200UE60, 36200UED60, 36200UJE60, 36200UJED60	36231AK
	0	9/32 (7.1mm)				36232AK
0		11/32 (8.7mm)	36220A 36220K 36220L	1*2*3*6*7	36200UA52, 36200UAD52, 36200UAK52, 36200UJ60, 36200UJD60	36231AH
0		11/32 (8.7mm)				36232AH
	0	11/32 (8.7mm)	NONE	1*2*3*6*7*8	36200UAK52	36231AJ
	0	11/32 (8.7mm)				36232AJ
0		13/32 (10.3mm)	36220B	1*2*6*7*8	36200UX52, 36200UX60	36231AL
0		3/8 (9.5mm)				36232AL
0		13/32 (10.3mm)	36220 36220J	2*3*7*8	NONE	36231AE
0		3/8 (9.5mm)				36232AE
0		35/64 (14.1mm)	36220X 36220Y		36200UY52, 36200UYD52, 36200UY60, 36200UYD60	
0		1/4 (6.35mm)				

From the library of: Diamond Needle Corp

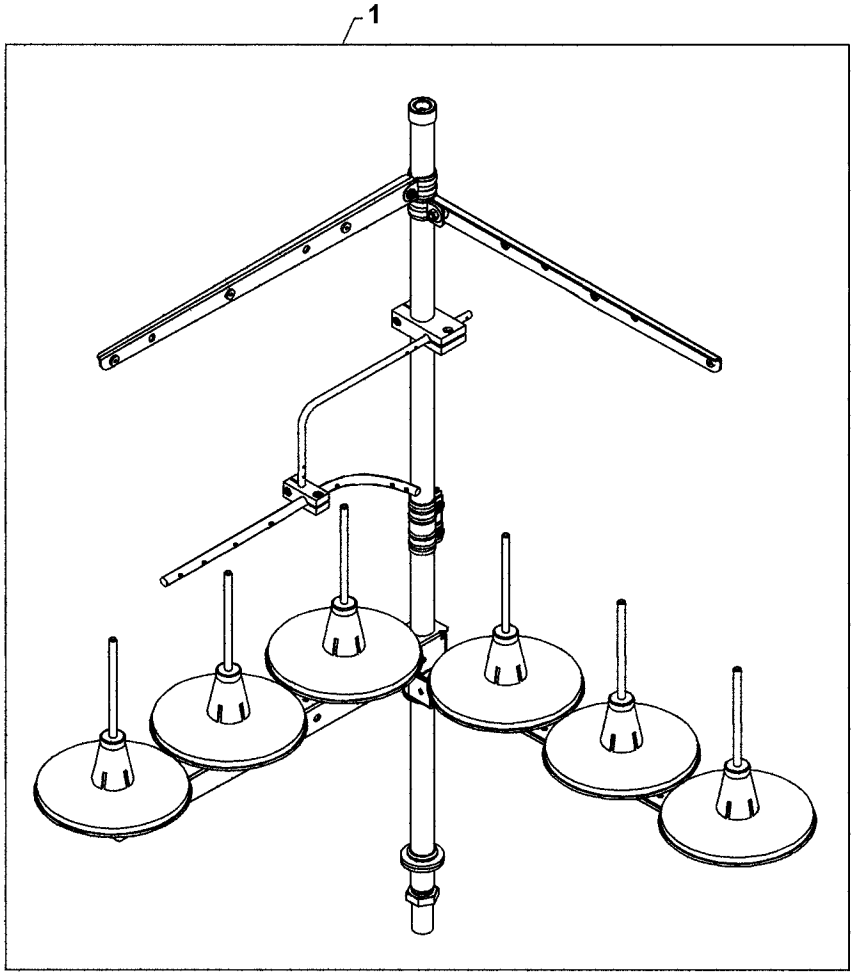

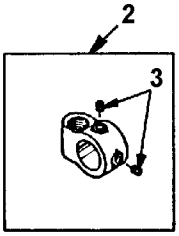

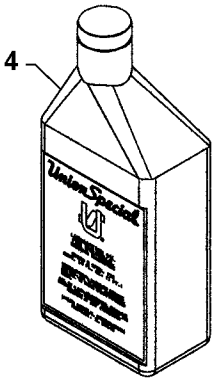

From the library of: Diamond Needle Corp

THREAD STAND

Ref. No.	Part No.	Description	Amt. Req.
1.	21101W6	Thread Stand, complete	1
*2.	21233KS	Bracket Connection, marked "KS"	1
*3.	22651CD-5	Screw, for bracket connection	2
4.	28604R	Oil	1

* These parts used with pedestal.

From the library of: Diamond Needle Corp

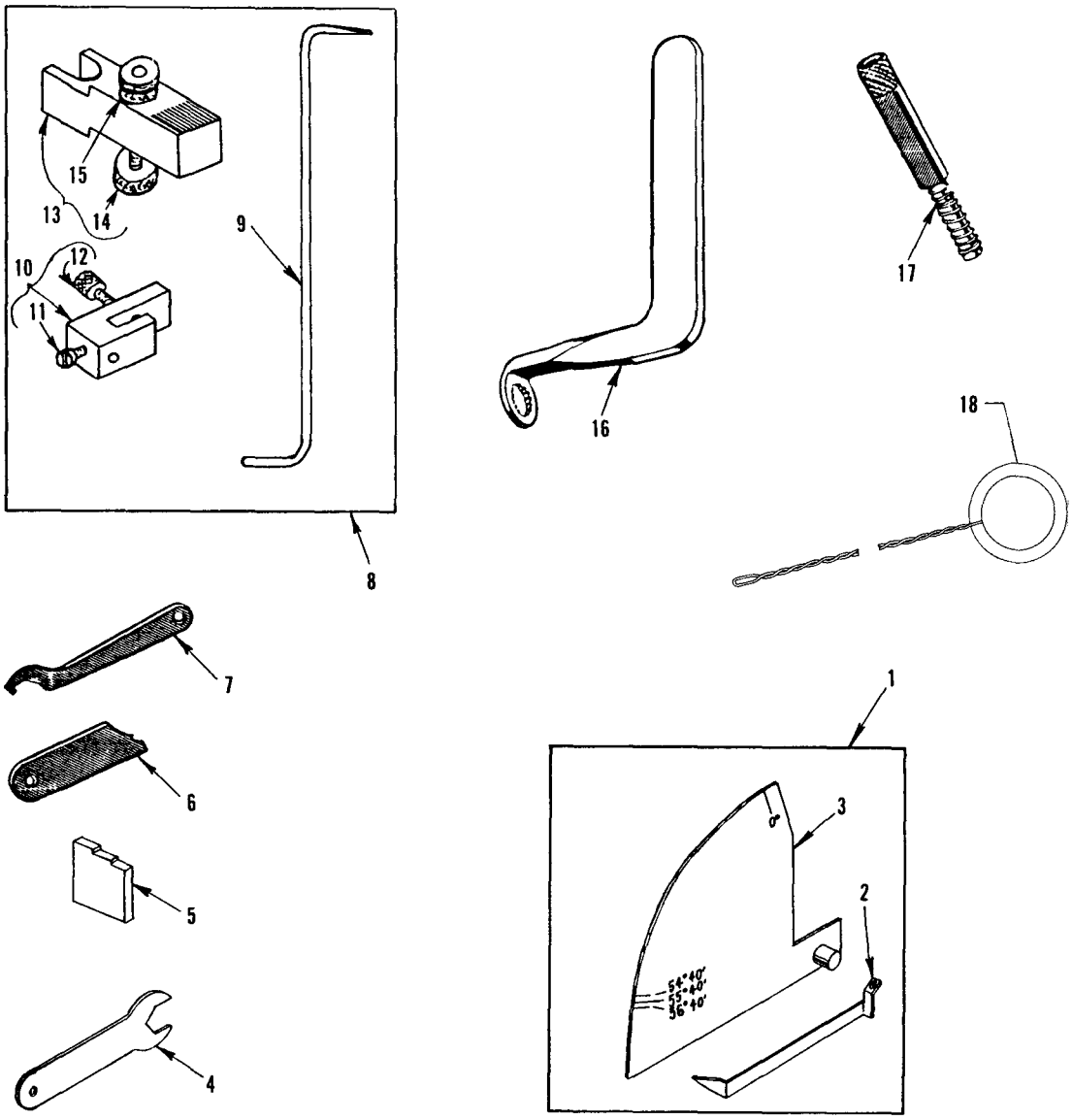

From the library of: Diamond Needle Corp

MISCELLANEOUS GAUGES & TAPE REEL PARTS

Ref. No.	Part No.	Description	Amt. Req.
1.	21227CN	Looper Travel Gauge, complete	1
2.	21227CM	Looper Travel Gauge Pointer	1
3.	21227CS	Looper Travel Gauge Plate	1
4.	21388AZ	Wrench, for driving link stud	1
5.	21227BU	Needle Height Gauge, for Styles 36200UAD52, UED52, UHD52, UYD52	1
-	21227DS	Needle Height Gauge, for Styles 36200UED, UJD60, UJED60, ULD60, UMD60, UYD60	1
6.	21225F-3/16	Looper Gauge	1
7.	21388Y	Spanner Wrench	1
8.	21227CG	Synchronizing Gauge, for looper and needle timing, complete	1
9.	21227CK	Synchronizing Gauge Rod	1
10.	21227CJ	Looper Clamp and Height Gauge	1
11.	22738	Screw	1
12.	22703A	Screw	1
13.	21227CH	Needle Setting Block	1
14.	14087	Thumbscrew	1
15.	1347A	Nut	1
16.	TT85	Wrench, for 3/16" square nut on screw	1
17.	21227BV	Looper Avoid Gauge	1
18.	51899	Threading Wire	1

From the library of: Diamond Needle Corp

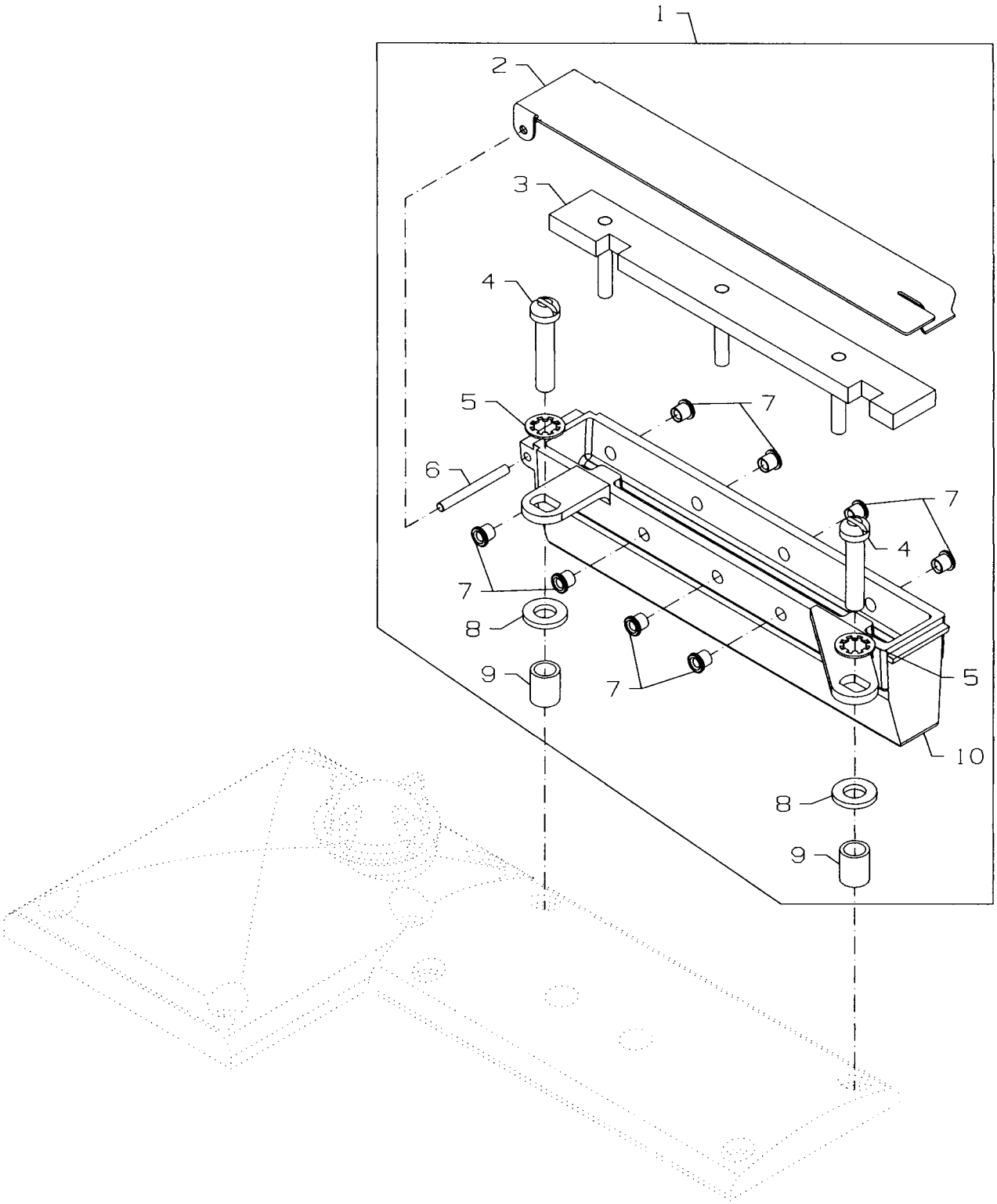

From the library of: Diamond Needle Corp

THREAD LUBRICATOR

Ref. No.	Part No.	Description	Amt. Req.
1.	29480AZY	Needle Thread Lubricator Complete	1
2.	35893J	Reservoir Cover	1
3.	666-339	Reservoir Wick	1
4.	22585C	Screw	2
5.	660-219AX	Pin	1
6.	50358M	Eyelet	8
7.	22894BL	Shoulder Screw	2
8.	35893K	Reservoir	1
-	28604W	Bottle of Silicone (not shown)	1

From the library of: Diamond Needle Corp

NUMERICAL INDEX OF PARTS

Part No.	Page No.
109	31
1096	27
1096B	41, 43
11550209	27
12865	43
12934A	23, 41
1347A	59
14087	59
150	49, 51, 53
15037A	43
18	37, 39, 43
21101W6	57
21225F-3/16	59
21227BU	59
21227BV	59
21227CG	59
21227CH	59
21227CJ	59
21227CK	59
21227CM	59
21227CN	59
21227CS	59
21227DS	59
21233KS	57
21388AZ	59
21388Y	59
21756G	27
22-331	53
22504C	39
22516A	23
22517	31
22519	31
22519F	27
22524	33, 35
22528	37
22539AA	23
22539AL	47
22539M	23
22539T	25
22560A	35, 47
22562A	45, 49
22562A	51, 53
22564	29
22564B	23, 25
22564D	43
22565A	27, 49
22565A	51, 53
22569B	23
22569G	41
22571A	45
22571B	27
22572B	43
22574	29
22578H	37
22580	27
22585	41
22585A	27, 31
22585A	43
22585B	35
22585C	31, 35
22585C	45, 61
22587B	29
22587E	27, 37
22587E	39
22587H	37
22596	45, 47
22596B	29
22596D	25
22651CD-5	57
22652A-6	43
22653B-8	35
22653E-24	45
22703A	59
22711	23
22716A	45, 49
22716A	53
22729C	37, 39
22729C	43
22729M	41
22731	49, 51
22731	53
22733B	25
22733G	39
22738	59
22738B	45
22738C	33
22738G	49, 51
22738G	53
22738H	35
22738P	49, 51
22738P	53
22747	37, 43
22758E	35
22759A	23
22766	29, 47
22767A	41
22768B	25
22777B	33
22784F	31
22791D	25
22791E	47
22795B	43
22797	29
22798	45
22799N	41
22801	27, 45
22829	25
22839	23
22839D	31
22845M	37
22849	45, 47
22881A	33
22894AM	27, 29
22894BK	31
22894BL	61
22894E	29
22894J	27, 31
22894K	27
22894W	27, 29
22894W	37, 39
22894W	47
22894X	41
22KH	23, 45
23420CZ	45
23420DB	45
23420DH	45
23423X	45
23424Z	45
255	31
258	39
258A	31, 43
269	37, 39, 43
28	33
28604R	57
28604W	61
28A	33
28C	25, 35
29101J	27, 39
29103T	27, 37
29105BH	25
29472AC	27
29472Y	27
29476XC	23
29476YP	35
29478CS	37
29478CT	39
29478CU	43
29478CZ	47
29480AZY	61
318	35
33174B	37
35751G	43
35761D	25
35763F	29
35763G	29
35766B	39
35767	33
35781D	25
35792	31
35792T	31
35816	29
35836C	39
35842J	39
35846	39
35846B	39
35850F	47
35851L	43
35851P	39
35851S	39
35862A	29
35866	39
35866A	25
35866B	25
35876U	45
35883AL	25
35883G	47
35884K	45
35887AE	23
35887M	23
35887R	23
35887X	23
35887Z	25
35888N	23
35890E	25
35890P	23
35893G	23
35893H	23
35893J	61
35893K	61
35894L	27
35895X	27
35895Y	27, 29
35896D	35
35897BV	27
35897BW	27
35897BY	29
36203	45
36204	23
36204A	23
36205A	37
36205B	37
36205H	37
36205J	37
36205M	37
36205N	37
36208A	43
36210	43
36215	29
36217A	33
36218-52	35
36218-60	35
36220A	51
36220E	49
36220H	49
36220K	51
36220M	49
36220V	49
36220W	49
36220X	53
36220Y	53
36221M	29
36221N	29
36222A	29
36222C	27
36223	27
36223A	27
36224H	45
36224K	45
36225	37
36226A	37
36226B	37
36226H	37
36226J	37
36226K	37
36229A-1	45
36229H	33
36230AH	53
36230AJ	53
36230AL	53
36230AN	53
36230AP	53
36230AQ	53
36230C	49, 51
36230D	49, 51
36230D	53
36230J	51
36230M	49
36230P	49
36230R	49
36230S	49
36230U	51
36231AM	49
36231AP	49
36231AW	49
36231AY	51
36231BD	53
36232AM	49
36232AP	49
36232AW	49
36232AY	51
36232BD	53
36233	31
36234C	37
36234E	37
36234F	37
36234G	37
36234M	37
36236	39
36236A	39
36236B	39
36236C	39
36236E	37
36236F	37
36236G	37
36236H	37, 39
36236J	39
36236K	39
36237	39
36237A	39
36237E	47

From the library of: Diamond Needle Corp

NUMERICAL INDEX OF PARTS

Part No.	Page No.
36237H	47
36237J	47
36237K	47
36237L	47
36237M	35
36238	47
36238F	47
36240	45
36240J	45
36244	37
36244A	37
36245B	43
36245D	41
36245E	41
36245F	41
36245G	41
36245H	41
36245J	41
36245K	41
36247	29
36248	43
36249	43
36249A	47
36249B	43
36250	49, 51, 53
36250B	49, 51
36250G	49, 51
36250J	49, 51
36250K	53
36250L	53
36250M	53
36251AA	41
36251B	41
36251C	41
36251E	49, 51
36251E	53
36251F	49, 51
36251F	53
36251FA	49, 51
36251FA	53
36251FE	49
36251G	49, 51
36251G	53
36251H	49, 51
36251H	53
36251J	49, 51
36251J	53
36251K	45, 49
36251K	51, 53
36251L	49, 51
36251L	53
36251M	29
36251N	29
36251V	41
36251W	49, 51
36251W	53
36253A	43
36253B	43
36253G	43
36254A	29
36254B	29
36256	23
36256A	23
36256B	47
36260B	25
36260C	25
36261	41
36261A	27
36263	29
36264B	33
36264D	29
36264E	33
36264F	33
36266	31
36266A	31
36270B	41
36271	25
36271A	25
36271E	25
36271G	25
36271H	25
36273A	41
36273C	41
36273D	41
36273G	41
36273J	41
36273K	41
36273P	41
36273Q	41
36273R	33
36273S	33
36273T	33
36273U	41
36275	41
36275A	41
36275B	41
36278	33
36278A	33
36278C	43
36278F	35
36278J	41
36278K	33
36278L	35
36278M	35
36278R	35
36278S	33
36278T	35
36278U	35
36279C	49, 51
36279C	53
36279D	49, 51
36279D	53
36279L	33
36279M	33
36279N	33
36280A	31
36280C	31
36280D	31
36280J	33
36280N	31
36280S	31
36280T	31
36280U	31
36280V	31
36280W	31
36282	47
36283B	45
36283C	45
36283E	45
36283F	45
36283G	45
36283H	45
36283J	45
36283K	47
36283P	35
36283R	31
36283S	31
36283T	31
36283U	31
36284	45
36284C	47
36284E	45
36284F	47
36284M	23
36284N	35
36284P	33
36284Q	47
36284R	47
36284S	25
36284T	23
36286	47
36289	33
36289A	35
36289B	33
36289K	23
36290B	25
36290E	35
36290F	23
36290G	25
36292K	31
36292M	31
36292N	31
36292Q	31
36293B	23
36293E	23
36293G	47
36293J	35
36293K	27
36293L	27
36293M	27
36293N	25
36294D	27
36294E	35
36296A	45
36296B	45
36297J	27
36297M	27
36298G	31
36298H	31
39145A	43
39592AK	31
39593C	23
40-407	45
41071G	23, 27
41255B	37, 43
43246	39
4761	43
50358M	61
50393-140	27
51235G	41
51259	33
51292F-2	31
51292F-4	31
51292F-5	31
51899	59
52336	43
52841H	41
52958C	23
52958F	23
531	45, 47
53636C	43
538	47
56390E	23
60078Z	47
604	43
6042A	23, 35, 39
605A	41
61321J	29
61321L	29
62238A	37, 39
62271B	25
660-1019	41
660-1115	47
660-1117	47
660-1130	35
660-1131	35
660-1132	25
660-206	25
660-207	27, 39
660-212	23
660-215	43
660-219AX	61
660-219D	41
660-219P	27
660-220	37, 47
660-221	43
660-254C	31
660-739	33
660-935	23
661-150	47
664F-16	35
666-338	27
666-339	61
666-340A	35
667D-16	45
671B3	27
73A	23, 25, 45
73C	23
77	29, 39, 43
86	31
87A	47
87U	37
88	43
90	23, 27
93	23
93A	23
94	31, 49, 51, 53
97A	43
98A	45
9937	35
999-196	47
B3319704L00	31
B3530555000	23
C36224A	45
C36224J	45
C36224N	45
C36224P	45
C36224Q	45
C50092S	31
CO67E	23
CQ200000000	37
CQ200000000	41
J87J	47
LA528	23
SS7090910TP	31
SS7110510SP	25
SS7110840SP	31
SS7111120TP	29
TT85	59
W56392F	31
WZ0641510KP	35

From the library of: Diamond Needle Corp

Union Special Corporation
Corporate Office
One Union Special Plaza
Huntley, IL 60142
Phone: 847•669•5101
Fax: 847•669•4454

Union Special GmbH
EuropeanDistributionCenter
Raiffeisenstrasse 3
D-71696 Möglingen, Germany
Tel: 49•07141•247•0
Fax: 49•07141•247•100

JUKI CORPORATION
INTERNATIONAL SALES DIVISION
8-2-1, KOKURYO - CHO,
CHOFU-SHI, TOKYO 182, JAPAN
PHONE: 03(3430)4001~5
FAX: 03(3430)4909 . 4914 . 4984

Finest Quality

JUKI

Union Special

From the library of: Diamond Needle Corp